Greenfield
Operation & Maintenance Manual

Table of Contents

ST. CROIX FEATURES 3
INSTALLATION 4
PREVENTING CHIMNEY PROBLEMS 4
SATISFACTORY PERFORMANCE 4
APPROVED FUELS 4
- **Corn, Pellets, Wheat, Rye, Cherry Pits & Distiller's Grain 4-5**

OPERATING INSTRUCTIONS 6
- **Control Board Features 7**
- **Pre-Lighting Instructions 8**
- **Lighting Your Stove 8**
- **Shutting the Stove off 9**
- **Diagnostic Features 9**
- **Safety Features 9-10**
- **Combustion Air Damper 10-11**
- **Thermostat Control 12**

MAINTAINING THE STOVE 12
- **Clinker Removal 12**
- **Daily Maintenance 13-16**
- **Periodic Maintenance 16-18**
- **Yearly Maintenance 19**

SAFE OPERATION 20
TROUBLESHOOTING AND FAQ 21-26
PARTS LAYOUT 27-29
WARRANTY 30
NOTES 31

"Please read this entire manual before installation and use of this pellet fuel-burning room heater. Failure to follow these instructions could result in property damage, bodily injury or even death."

"Contact local building or fire officials about restrictions and installation inspection requirements in your area.

Save these Instructions
210

Dear St. Croix Stove Owner:

Congratulations! Your purchase of a St. Croix stove places you among a select group of individuals who have demonstrated their concern about residential heating efficiency and our environment.

This owner's manual is designed to help you obtain maximum benefit from your St. Croix stove.

Please read this manual in its entirety BEFORE operating your stove. During the manufacturing process every effort has been expended to ensure that each St. Croix stove meets the highest quality standards of material and workmanship.

Here are some important aspects of stove installation and operation, which you must observe in order to obtain maximum comfort and safety from your new St. Croix stove.

1. Have your new St. Croix stove installed by trained, qualified personnel.

2. Use only clean, dry quality corn, wheat, rye or pellets for optimum performance in your St. Croix stove.

3. Faithfully adhere to the maintenance program described in this manual. Thank you for selecting a St. Croix stove as the environmentally preferred answer to your residential heating needs.

Greenfield

Features

50 Lb hopper

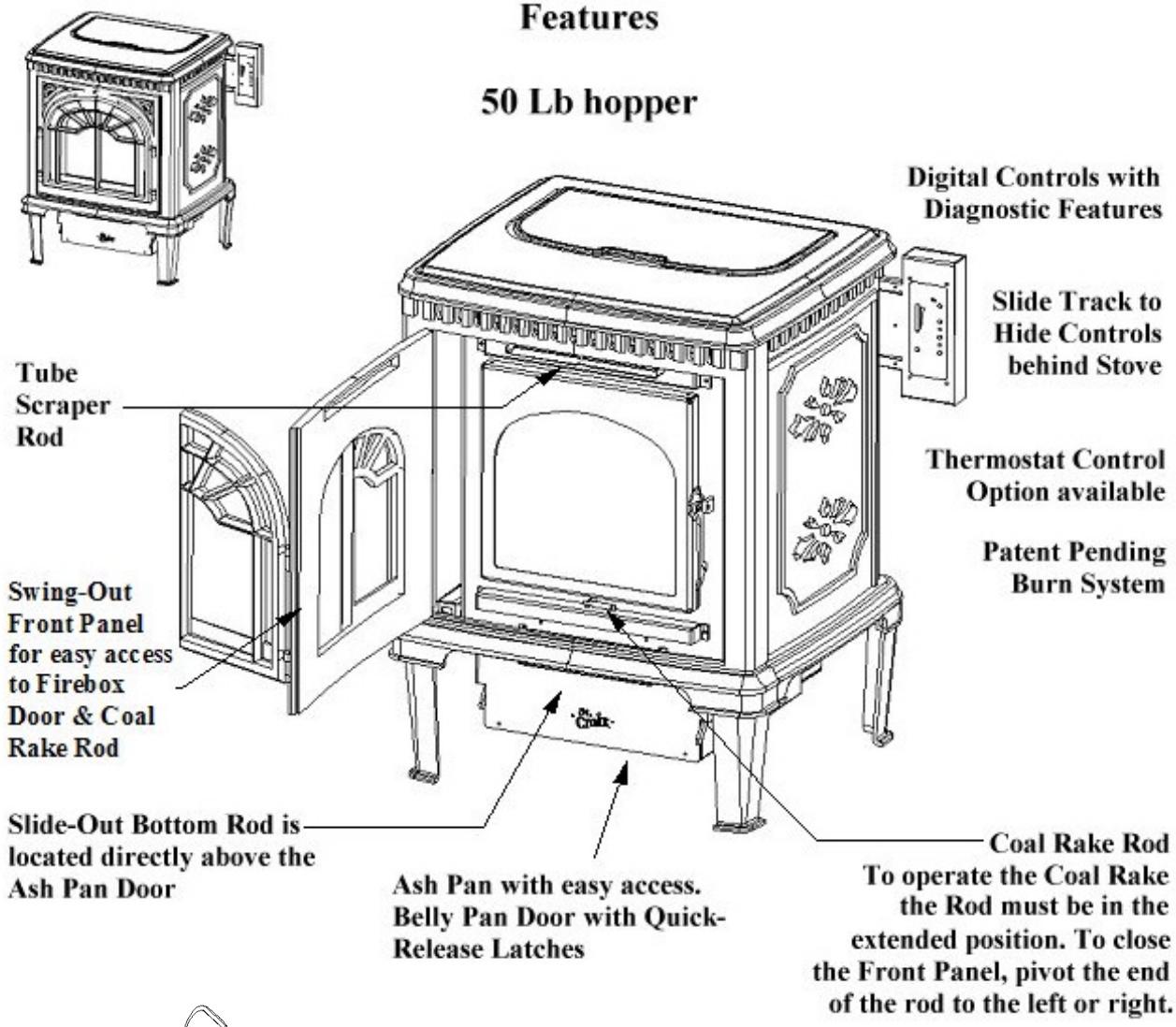

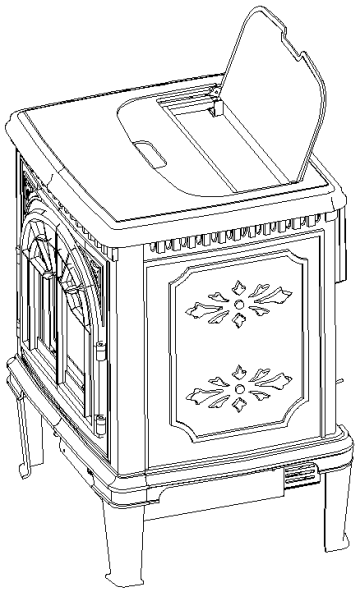

The Greenfield Hopper opening has 2 hopper lids. The Inner Lid has a gasket and provides a tight seal.

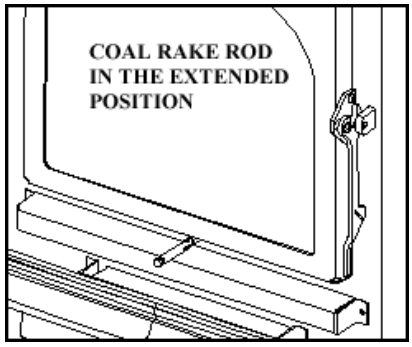

Figure 1

Operation and Maintenance
Greenfield Stove

SAVE THIS OPERATIONS AND MAINTENANCE MANUAL

CAUTION: Operate this unit only with the fuel hopper lid closed. Failure to do so may result in emission of products of combustion from the hopper under certain conditions. Maintain hopper seal in good condition

INSTALLATION

Proper installation is essential for safety, effective operation, warranty coverage, insurance requirements and to meet local building codes. Installation requirements are described in the Installation Manual included with your new stove.

PREVENTING CHIMNEY PROBLEMS

When burning corn care should be taken in how the venting system is installed. To burn corn the moisture content should be 15% or less. This is much higher that the moisture content of wood pellets and can result in condensation forming in the venting system in certain installations. The chimney system should stay within the warm envelope of the house as much as possible. Only penetrate the exterior of the home where the exhaust system will terminate. **Remember condensation from a corn stove is detrimental to the venting system. Only buy venting systems that are warranted when burning corn.**

The chimney and chimney connector should be inspected at least once every two months during the heating season to prevent the system from getting plugged with Fly ash. Clean the exhaust system if needed. Use of an appropriately sized chimney brush or the Services of a Professional chimney sweep are recommended.

APPROVED FUELS

SHELLED CORN

Shelled corn must be 15% or less moisture content. The keys to satisfactory performance are: proper operation of the stove, diligent maintenance and burning only dry, clean, quality corn. Corn dust must be screened prior to using.

NOTE: Corn with excessive grain dust must be screened, by sifting with 3/16" mesh screening. Large pieces of cob may plug the auger.

Clinkers and ash are a by-product of burning corn and are not caused by your stove. Stove performance can be quickly and severely reduced if poor quality corn is used. Contact your dealer for more information on where to get high quality corn to burn in your new corn stove.

Store corn in a tight container use other methods to ensure they do not become rain soaked or absorb moisture from damp or wet floors. This will also prevent rodents from becoming a problem. Do not store corn within stove installation clearances or within the space required for clinker removal.

The stove is not warranted against damage caused by poor quality corn, incorrect operation, poor maintenance or incorrect installation.

Pellets

St. Croix Corn stoves come equipped with a burn pot installed that has removable side shields.

When burning pellets or any other fuels ***mixed with pellets,*** the side shields must be removed. Failure to remove the side shields will prevent fuel from spilling into the ashpan in the event the pot overloads. See figure 2 below showing the removal of the side shields. The shields lift up and are removed without needing any tools.

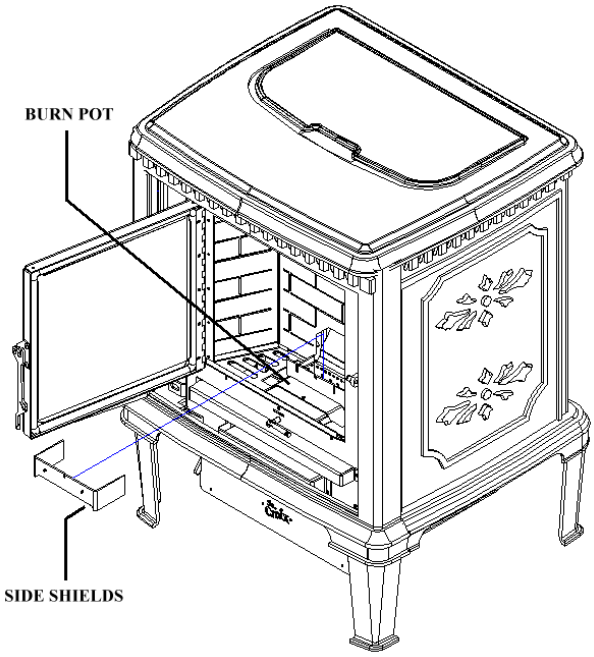

Figure 2

Cherry pits

When burning cherry pits or any other fuels ***mixed with cherry pits,*** the side shields must be removed. Failure to remove the side shields will prevent fuel from spilling into the ashpan in the event the pot overloads.

Distiller's Grain pellets

When burning Distiller's Grain pellets or any other fuels ***mixed with Distiller Grain Pellets,*** the side shields must be removed. Failure to remove the side shields will prevent fuel from spilling into the ashpan in the event the pot overloads.

Distiller's Grain is a byproduct of producing Ethanol and has higher oil content than corn itself. Due to this the stove may require more frequent cleaning. Soot may rapidly form in the exhaust system if the air is not set properly. Check the exhaust frequently when burning Distiller's Grain pellets.

Wheat

Wheat is a small grain and burns in a similar manner as corn. It forms a clinker in the burnpot that is tends to stick to the sides of the pot. The clinker may need to be pushed into the ashpan using a long narrow screwdriver.

Since Wheat is a small lightweight grain, more residue will blow out of the burnpot as it burns. If an excessive amount seems to be blowing out of the pot, adjust the damper by closing it a small amount at a time. *(Read the section covering the Combustion Air Damper on page 10 & 11)*

Rye

Rye is a small grain and burns in a similar manner as corn. It forms a clinker in the burnpot that is tends to stick to the sides of the pot. The clinker may need to be pushed into the ashpan using a long narrow screwdriver.

Rye is also a small lightweight grain, more residue will blow out of the burnpot as it burns. If an excessive amount seems to be blowing out of the pot, adjust the damper by closing it a small amount at a time. *(Read the section covering the Combustion Air Damper on page 10 & 11)*

PREVENTING CHIMNEY FIRES

Chimney fires can be prevented by properly operating the Stove and by periodic inspection and cleaning of the chimney. When wood is burned it produces tar and other organic vapors, which combine with expelled moisture to form creosote. The creosote vapors condense in the relatively cool chimney flue associated with a slow burning fire. As a result, creosote residue accumulates on the flue lining. When ignited this creosote can result in an extremely hot chimney fire.

The chimney and chimney connector should be inspected at least once every two months during the heating season to determine if a creosote build-up has occurred. If a significant layer of creosote has accumulated (3 mm or more) it should be removed to reduce the risk of a chimney fire. Use of an appropriately sized chimney brush or the services of a professional chimney sweep are recommended.

The chimney and chimney connector should be inspected at least once every two months during the heating season to prevent the system from getting plugged with Fly ash. Clean the exhaust system if needed. Use of an appropriately sized chimney brush or the Services of a Professional chimney sweep are recommended.

OPERATING INSTRUCTIONS

A different type of heater. The corn stove is neither a cordwood stove nor a Stove. Its operation and maintenance differ from the traditional wood stove. FOLLOW THESE OPERATING INSTRUCTIONS EXACTLY AS STATED TO ENSURE SAFE AND RELIABLE OPERATION.

1. Carefully read this "Operation and Maintenance" manual in its entirety BEFORE lighting your stove for the first time.

2. Obtain final inspection and approval of installation from local building officials.

3. Carefully clean all marks off the gold plated parts before the first fire is lighted. Use a soft cloth and a "Windex" type cleaner. **Caution:** Never use an abrasive cleaner on any plated or painted parts of the stove.

4. Have your dealer demonstrate all the operational and maintenance steps necessary for proper use of the stove. Sign and return the warranty card, to the address listed on the back page.

5. Some odors may be given off during the first few hours of burning during initial break-in. These odors are normal and not harmful. However, ventilating the room until the odors disappear is recommended.

6. The stove will become HOT while in operation. Keep children, clothing and furniture away from all stove surfaces.

***WARNING:* Direct contact with the stove while operating may cause skin burns.**

7. To avoid the possibility of smoke and/or sparks entering the room always keep firebox and ash pan doors closed whenever the stove is operating.

8. A certain amount of carbon monoxide may be produced within the stove as a by-product of combustion. All exhaust vent connections must be sealed with **RTV silicone** to assure a gas tight seal. Any leaks into a confined area caused by faulty installation or improper operation of the stove could produce dizziness, nausea and in extreme cases, death.

9. An outside source of combustion air is required on all mobile home installations. If room air is used to supply combustion air, room air starvation, operation of exhaust fans and icing of air vents can adversely affect proper stove operation. If these conditions exist, outside air should be used.

10. Smoke detectors, installed in the same general area as the stove, may be activated if the stove door is left open and smoke is allowed to enter the area.

READ "FREQUENTLY ASKED QUESTIONS" ON PAGES 21 – 26 BEFORE OPERATING THE STOVE.

Control Board Features

The Control Board controls all functions of the Stove by monitoring sensors that are in the system. These sensors serve 2 purposes.

a. General Operation of the Stove.

b. Safety Features, to shut the unit down in the event the sensors detect a problem in the unit.

The Control Board also has Diagnostic Capabilities to help in diagnosing 3 areas in the Stove. These areas are:

1. High Temperature Limit.

2. Proof of Fire Sensor

3. Vacuum in the Firebox

A closer look at the Control Board to the right in figure 3 will explain how the board works. There are five buttons labeled 1 through 5, a slide switch labeled 6 and a LED Light bar with 5 Heat Settings. ***The LED Light bar is also used during the Diagnostic process, see page 9 for more details.***

The buttons on the board function as follows: *(Refer to Figure 3. The touch pad buttons and Slide Switch are labeled with the white numbers 1 through 6)*

1. The Heat Level button (1) will advance the setting between level 1 and 5. Once you reach level 5, it will drop back to level 1. Each level has a LED light to indicate where the board is set.

2. The On/Off button (2) turns the Stove On and Off. It will also reset the board after the board has sensed a problem and is flashing a Diagnostic code.

3. The auger button (3) will allow the customer to manually auger corn into the burn pot on start up when needed. This is particularly helpful in priming the Auger Tube when it is empty.

4. The Draft Trim button (4) allows for adjusting the Exhaust fan voltage on Heat Level 1 only. Push the button and the all of the LED Lights in the light bar will flash once. This decreases the draft fan voltage approximately 5 volts below the default setting. Push the button a second time and all of the LED Lights in the light bar will flash twice. This decreases the voltage approximately another 5 volts. Pushing the button a 3r time will reset the voltage to the default setting. This adjustment is available to fine tune the #1 Heat Level draft setting. This would only be used in the case the Stove was hooked up to a tall Vertical Chimney *(see point 11 on page 24 for more information)*

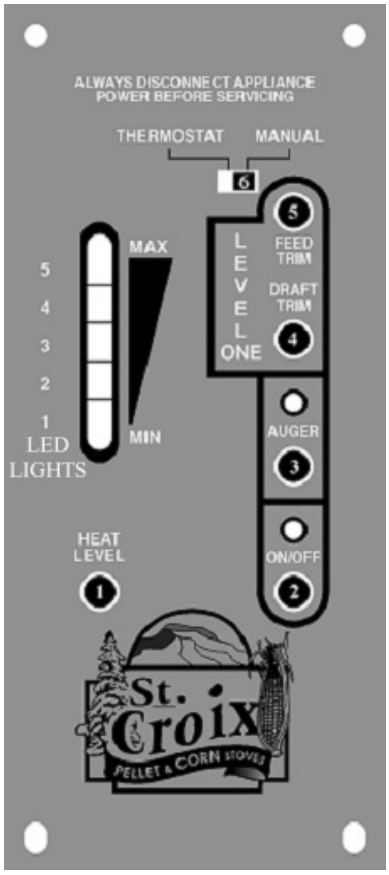

Figure 3

5. The Feed Trim button (5) will allow the Fuel feed rate to be adjusted on Heat Level 1 only. Heat Level 1 should be seen as the Pilot setting of the Stove, when operating on a Thermostat. Pushing the Feed Trim button (5) will switch between the different adjustments. Heat Level one can be adjusted in the following ways:

a. The first LED only indicates the Normal #1 setting. (1.5 second on time). This is the default setting.

b. The first and fourth LED lights indicate the #1 **Low** setting. (1.25 second on time) This will reduce the heat output on the #1 setting. This setting will also create more buildup on the glass. (see point 10 on page 23)

c. The first and fifth LED lights indicate the #1 **High** setting. (1.75 second on time) This will produce the most heat available on the #1 setting. This is helpful in keeping the glass a little cleaner when burning on low.

The adjustments described in points 4 and 5 remain in effect as long as the unit is plugged in. If the unit gets unplugged or if there is a power failure the settings are lost and the adjustments would need to be reset.

6. Thermostat Slide Switch. Use this switch to change the Operations mode from a Manual Mode to Thermostat Mode.

Pre-Lighting Instructions

When lighting your stove for the first time or any time you have run out of corn you will need to fill the hopper with corn. Corn is fed from the hopper to the burn pot by an auger. A high torque motor that is capable of doing SERIOUS harm to fingers drives the auger. Keep fingers and other objects away from the auger.

WARNING: The Auger can start at any time while the stove is running

CAUTION: The Coal Rake must be pulled out and the Slide-Bottom pushed in to operate the stove. (See Figure 1, Stove Layout on page 3)

WARNING: The Fire Door and Ash Pan Doors must be in the latched position during normal operation.

Lighting Your Stove.

1. Make sure there is corn in the hopper.

2. Add one cup of **Pellets** to the burn pot (not more and not less). Do not try to start your stove with corn; Corn is difficult to start. Add a generous amount of starter gel to the pellets.

3. This next item is optional, but it will give an immediate boost to the start up procedure. Crumple up half of a newspaper page, light the gel and toss the paper in the burn pot.

4. Close the door and push the On/Off button on the control board. (*Button #2, see figure 3)*

5. Set the controls to Heat Level #1

6. Once the Proof of Fire switch locks in and the Convection Fan turns on, adjust the heat level to the desired level.

At this point all that needs to be done is to monitor the burn pot to make sure the stove starts up properly. Once the On/Off button has been pushed the Start Up program takes over.

The Start up Program works as follows:

a. The Combustion Fan comes on at high speed and the control board checks to make sure the Vacuum switch locks in. (See section on Diagnostic features on page 9)

b. When the Control Board senses the Vacuum switch the Exhaust Fan drops to a lower start up speed until the Proof of Fire Switch locks in.

c. After 5 minutes the board checks for "Proof of Fire" and automatically starts feeding corn on the #1 setting. If the board senses P.O.F. then the stove has started successfully.

d. If the board fails to sense P.O.F. after 5 minutes it will repeat the last step and continue feeding corn on the #1 setting for 5 more minutes.

e. The board will check for P.O.F. again. If the board still fails to sense the Proof of Fire switch the stove will go into "Safety shutdown" (See section on Diagnostic Features on page 9).

If stove fails to start, repeat steps 2 through 6 from the section on Lighting Your Stove.

CAUTION: NEVER ADD FIRE STARTER TO A HOT STOVE.

Shutting The Stove Off ***(Refer to Figure 3)***

1. Press the On/Off switch (2) once; the lights will go off and the fire will go out in a few minutes. The board essentially goes into "Safety shutdown".

2. As long as the Exhaust Temperature within the stove remains above 110°F, the Room Air Fan and the Combustion Exhaust Fan will continue to run. Once the P.O.F. switch drops out the Combustion Fan will run for another 10 minutes and finally the stove will shut down completely.

3. NEVER unplug the stove to shut it off. Doing so may cause a significant amount of smoke to enter the room.

Diagnostic Features of the Control Board

The #2 LED and the #3 LED lights on the LED Light bar as show in Figure 2 will flash to give a diagnostic code to help in diagnosing problems that may occur.

These conditions fall into 2 categories:

a. Heat related issues.

b. Vacuum related issues.

The Diagnostic Lights flash as follows:

1. The **Proof of Fire** switch. This switch will sense the temperature of the Exhaust rising during start up. If the Exhaust temperature does not reach 110 degrees F, or if during use the temperature drops below 110 degrees F, the Stove will go into **"Internal Alarm"** and the Auger will quit feeding fuel. Once the stove completes the safety shutdown, the #3 LED will start blinking. *(See Figure 3 on Page 7 and point 5 on page 22)*

2. The **High Limit** switch. This sensor will sense if the unit reaches temperatures that are too high for normal operation. If this happens the Auger will quit feeding and the #2 and #3 LED lights will flash simultaneously. *(See Figure 3 on Page 7 and point 6 on page 22)*

3. The **Vacuum** Switch - For the stove to operate, the Firebox needs to be sealed. During the first 30 seconds after the stove has been turned on the Control Board will check if the switch senses negative pressure (Vacuum) in the Firebox of the stove. If there is no negative pressure, the stove will shut down and the #2 LED will start blinking. *(See Figure 3 on Page 7 and point 4 on page 21).*

"Power Reset". If the board becomes unresponsive you must unplug the stove, wait 10 seconds and plug the stove back in to reset the board.

"Internal Alarm". When the control board becomes unresponsive, the control board is in Internal Alarm. The control board has sensed one of the Safety sensors. This may cause the stove to go out. **In some cases, after waiting approximately 45 seconds the stove will start responding to the control board again.** Many times, the cause of this is a change in the vacuum inside the stove. This may be caused by excessive wind, opening the Firebox door or opening the Ash Pan door. The control board will monitor the vacuum switch and resume normal operation if the vacuum returns to normal.

Safety Features

1. **"High Limit" switch",** an overheat safety switch will shut off the fuel feed if the Stove reaches temperatures above normal operating temperature. This is a "Normally Closed" switch and is part of the Fan limit control. If the High limit switch trips several times, the problem in the Stove ***must*** be diagnosed before the Stove is put back in service, (Defective Room Fan, dirty Room Fan, dirty Return Air Filter, defective Fan Limit Control or possibly a bad Control Board)

2. **Proof of Fire switch** also called the **P.O.F.** This senses the temperature rise in the exhaust system. The switch is "Normally Open" and closes the circuit at 110 degrees. The Stove will shut down if temperatures above 110 degrees F are not sensed during start up or if the temperature drops below 110 degrees during normal operation.

3. **Vacuum switch** also called the **Negative pressure switch**. When the stove is turned on the Exhaust fan will create a negative pressure in the firebox. The control board continually checks to see if Negative Pressure (vacuum) is present during operation of the Stove. If the exhaust venting system becomes clogged or obstructed, the firebox door or ash pan door are left open or the exhaust fan quits working the control board will go into "Safety shutdown". There is a 60 second window to allow for cleaning the glass and removing the clinker before then Stove shuts down. This is sufficient for the Daily Maintenance

The St. Croix corn Stove has been Safety Tested by an accredited, independent laboratory.

> **WARNING: These safety features are designed to protect life and property. Bypassing these features voids all warranties and the safety listing of the stove.**

Combustion Air Damper

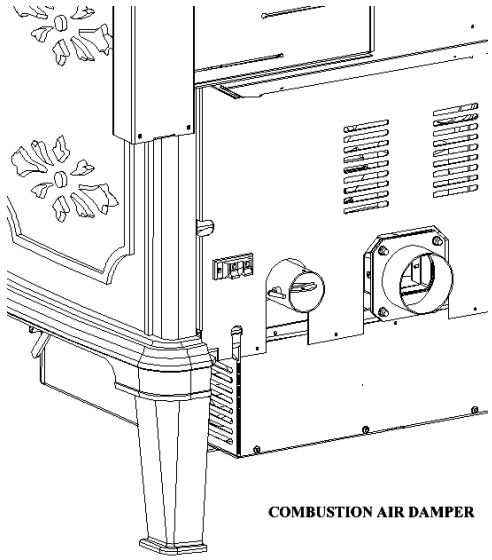

Figure 4

Your stove is equipped with an air inlet damper. (See Figure 4) This is one of the most important areas of setting up your stove to burn corn.

Adjusting the Damper may take a little time and patience, but only needs to be done once. After the damper has been adjusted for the unique installation in your home the control board will do the rest.

The purpose of this damper is to adjust combustion airflow to match the characteristic of each specific air inlet and chimney configuration. The damper is preset at the factory with a setscrew. The damper will most likely only need s small adjustment during the break in period. To know if the damper needs to be adjusted you should learn to recognize how the corn burns in the St. Croix corn burning system. The burn pot should be **"BALANCED"**. What this means is the corn that is being augered into the burn pot rapidly turns into glowing coals. If you see a lot of unburned corn in the pot an adjustment may be needed. In an unbalanced pot the corn will quickly stick together and prevent the proper flow of combustion air. The pot will overload and the fire will go out. Once the damper is adjusted for your installation, it should not be necessary to make any further adjustments to the damper. The combustion air is automatically increased every time the feed rate is advanced on the control board. Adjusting the damper should be done during Break-in. This requires the burning of 15 bags of corn or continuous burn for two weeks.

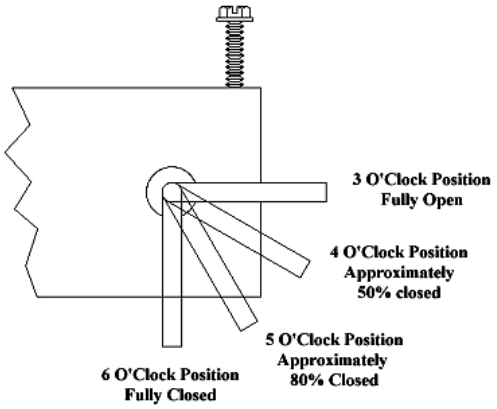

Figure 5

If you experience problems adjusting the stove during the Break-In Period, contact your dealer.

Terminology used in the Damper Adjustment

1. **Balanced** burn pot. This means the corn rapidly turns into red-hot coals once it is in the burn pot.

2. **Lag time**. This is the time it takes for the corn to start burning and the burn pot to become balanced. Corn will tend to stick together in a clump in the burn pot if the corn feeds in faster than it's burning.

3. **Overloaded** burn pot. Once the corn has formed a clump in the burn pot the pot will overload and slowly the fire will die out.

Procedure for adjusting the damper:

As was stated earlier there is a setscrew in the damper and the damper has been preset at the factory. This setting will most likely work for 90% of the most common installations. Long horizontal runs might need the damper opened. Tall vertical runs might need the damper to be closed a little, etc. To adjust the damper, use the setscrew to make the adjustments. To make an adjustment turn the screw ½ turn clockwise to open the damper or ½ turn counter clockwise to close the damper. Remember to use the damper handle to bring the damper up to the screw. The damper will not close by itself. After making an adjustment wait at least 15 minutes to see how the burn pot reacts to the change.

a. Once the stove is burning, leave the control board on the #1 setting for ½ an hour. This will allow the stove to warm up before any adjustments to the damper are made. After ½ an hour look in the burn pot to see if the burn pot is balanced. Unless there weren't enough coals in the pot, when the corn started augering into the pot on start up, the stove should be burning fine and an adjustment is not needed.

b. Advance the heat setting to #2 and let the stove burn at this setting for ½ an hour. Check the burn pot to see if it is balanced. Most likely the stove will be burning fine at this point, because the damper was preset at the factory.

c. Advance the heat setting to #3 and let the stove burn at this setting for ½ an hour. Check the burn pot to see if it is balanced.

   Remember: Look at the coals in the pot, not at what the flame looks like. Most likely the damper will not need to be adjusted.

d. Advance the heat setting to #4 and let the stove burn at this setting for ½ an hour. Check to see if the pot is balanced. This is where a damper adjustment ***might*** need to be made. As the heat setting reaches the higher settings the **"Lag time"** can become too long if the air isn't adjusted correctly. If you notice that the coals are being covered up with unburned corn, adjust the damper to give it more air. **Remember:** Only turn the setscrew one ½ turn **clockwise** to open the damper (You might need to use a screwdriver to break up the clump of corn in the burn pot to allow for proper airflow). Wait 15 minutes to see if the burn pot becomes balanced. Repeat this step as many times as needed until the burn pot becomes balanced.

e. Advance the heat setting to #5 and let the stove burn at this setting for ½ an hour. Check the burn pot to see if it is balanced A small damper adjustment might need to be made at this time to make sure the "**Lag time"** isn't too long. **Remember:** Only turn the setscrew one1/2 turn **clockwise** to open the damper. Wait 15 minutes to see if the burn pot becomes balanced. Repeat this step as many times as needed until the burn pot becomes balanced.

If the stove has been connected to an existing Chimney system that has good Natural Draft, the procedure mentioned in the points **d** and **e** above may actually require that the damper gets closed slightly instead of opened to compensate for the additional draft in the chimney system.

This process will take about 3 hours, but it only needs to be done once at the initial burn. This will adjust the stove to the unique circumstances of your home.

Thermostat Control - Most multi-fuel stoves aren't capable of using a thermostat. This is due to the fact that many fuels do not react very well to sudden increases in the feed rate. A stove that goes from a #1 setting to a #5 setting will almost always have problems making that transition. The burn pot will overload and the fire will go out. The St. Croix corn stove uses a simple time delay between each Heat setting to allow the stove to react to the increase in corn. This allows the stove to function very well on a thermostat. A Milivolt type thermostat will work with this control board. **The stove is not fully automatic when running on a thermostat, when the thermostat is not calling for heat the stove will drop to the low (#1) setting as a pilot.** *For location to connect the thermostat wires see Figure 4 on page 10.*

MAINTENANCE OF THE STOVE

The St. Croix corn clinker theory - And why we do what we do.

Many manufacturers of multi-fuel stoves use complicated stirring mechanisms to break up the clinker in the burn pot. **We feel that is a mistake.**

Most grains do not burn as well when it is disturbed in the burn pot. Corn, wheat, rye & distiller's grain pellets need high temperatures and proper airflow in the burn pot to burn properly. That energy is stored in the clinker that is being formed in the burn pot. It glows red-hot and provides the heat needed to ignite the corn that is being fed into the burn pot. When the clinker is broken up, that constant source of energy is lost, and now it becomes more difficult to burn grain. When grain is not burning properly it tends to stick together and form a clump in the burn pot. It is impossible for air to flow through this clump and soon the pot will overload and the fire goes out.

This is where some manufacturers use the stirring mechanism to break up the clump of fuel to maintain proper airflow and others use large burn pots to handle this problem (Smaller burn pots are better). The truth is neither is needed. The St. Croix burn system allows grains to be burned efficiently and completely in a relatively small burn pot.

Clinker Removal.

Once a clinker has formed in the burn pot, the problem is how to get rid of it. The St. Croix Burn system is designed to be able to remove the clinker without loosing the fire in the burn pot. It is a 3-part system.

1. The coal rake. This is a "fork" shaped device that will allow the stove operator to separate the burning coals from the top of the clinker.

2. The slide out bottom. This allows the bottom to be pulled out so the clinker can drop out of the bottom of the burn pot.

3. The program on the control board. To drop the clinker you set the board on the #1 setting for a couple of seconds and then return the stove to the desired setting. This starts a time delay in the program to allow the clinker to be removed, the coals to be dropped to the bottom of the pot and the Burn pot to become balanced again before the board resumes on the setting of you choice.

NOTE: FAILURE TO KEEP YOUR STOVE CLEAN, AS DESCRIBED IN THIS MANUAL, COULD RESULT IN POOR OPERATION, INEFFICIENT FUEL USAGE AND A POSSIBLE SAFETY HAZARD! IT IS YOUR RESPONSIBILITY TO DETERMINE NEEDED MAINTENANCE FREQUENCY.

CAUTION: THE DOOR AND FRONT PART OF THE STOVE WILL BE HOT. DO NOT TOUCH ANY PART OF THE STOVE THAT IS HOT!

This stove requires a minimum amount of daily maintenance. Required maintenance depends largely upon the quality of fuel burned and the rate of burn. The amount of daily maintenance will increase if fuel quality decreases and/or the burn rate increases. The operator of the stove is responsible for determining the frequency of cleaning the stove.

Daily Maintenance

Example of Schedule for dropping Clinkers from the burn pot: This may be required more than once a day, depending on the burn rate of the stove and the quality of fuel used. **Check the stove frequently at first to establish a Maintenance Schedule for cleaning the burnpot. If Clinker is not removed, the burnpot will overload and fuel will spill into the Ashpan.**

1 - Continuous burning of the stove on the Low burn setting (Pilot) – Approximately every 48 hours. This may vary depending on the quality of fuel used.

2 - Continuous burning of the stove at the High burn setting (#5) – **Approximately every 18 hours**. This may vary depending on the quality of fuel used.

The Daily Maintenance will focus on 4 areas in the stove: removing the Clinkers from the Ash Pan (if needed), dropping the Clinker from the Burnpot, cleaning the Heat Exchange Tubes and cleaning the Glass. A break down of this process consists of these steps:

Note the position of the Coal Rake Rod and the Slide-out Pot Bottom Rod during normal operation!!

Normal Operation
Figure 6

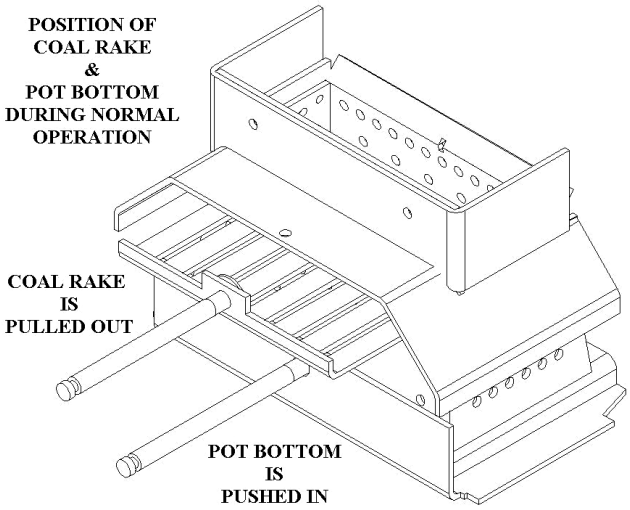

How to drop the Clinker from the Pot

1. **The coal Rake.** The first step is to push the coal rake in and shave the burning coals and corn off the top of the clinker. Once this is done open the door and add a ¼ cup of pellets on top of the coals *(See figure 7 below).* To push in the Coal rake, use the Rod Handle tool shown in figure 9 on page 16.

Figure 7

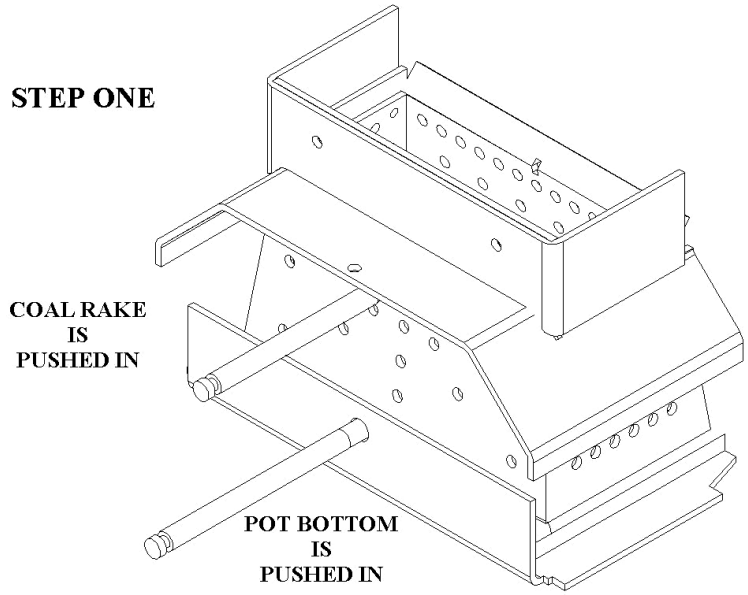

2. **The ash pan.** Make sure the Ashpan is not too full to receive a clinker. If the Ashpan is too full, the clinker may not drop all the way through. This will not allow the pot bottom to be closed. If this happens, empty the Ashpan and restart the stove.

3. **The slide out bottom.** *(See figure 8 on page 15)* Now you are ready to drop the clinker from the burn pot. Pull the bottom out in one quick motion and let the clinker drop into the ash pan. Quickly push the bottom in again. To pull out the slide bottom use the Rod Handle tool shown in figure 9 on page 16 (see point 2 at the top of page 16).

Figure 8

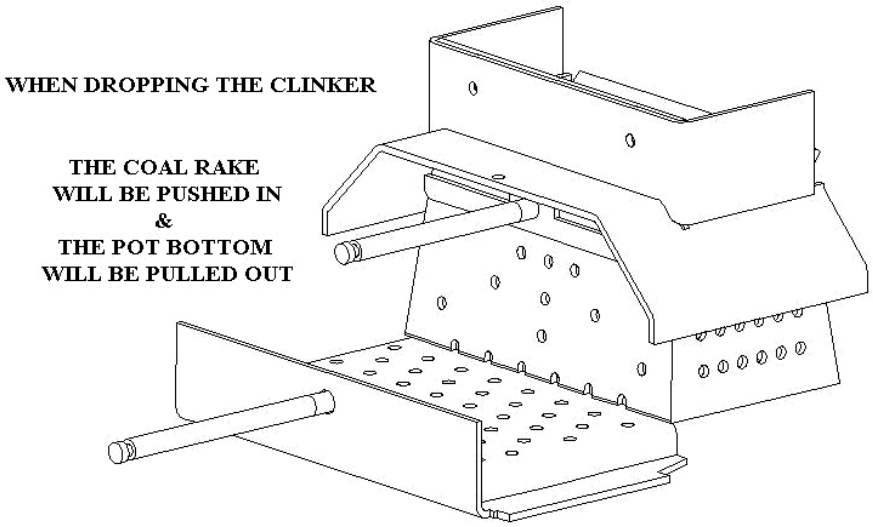

4. **The control board.** Set the heat setting to #1 for a few seconds and return to the setting it was on. This initiates a time delay for dropping the clinker.

5. Dropping the coals back into the burn pot. At this time pull the coal rake back out of the burn pot to drop the coals in the pot. *See position of Coal Rake & Pot Bottom in figure 6 on page 13 for normal operation.*

The time delay in the program will allow a smooth transition back to where the stove was burning before the clinker was dropped.

6. Cleaning the Heat exchange tubes. Now you can pull the tube scraper back and forth a couple of times to keep the tubes clean. If the Tube Scraper feels sticky and difficult to move, check for the presence of creosote on the tubes. If creosote is present a damper adjustment may be needed or the Stove has become plugged and needs a thorough cleaning. Call Dealer for assistance. To pull the tube scraper back and forth use the Rod Handle tool shown in Fig. 9 on page 16.

7. Use a dry paper towel to clean the glass. Quickly open the door and wipe the glass. The rate of burn will determine how often the window needs cleaning. Prolonged burning at a slow burn rate will result in the need for more frequent window cleaning. Cooling the Stove and wiping the window daily with a cloth or paper towel will normally keep the window from accumulating difficult to clean residue. Use of a glass cleaner ONLY permitted when the Stove is cold.

CAUTION: Do not slam the door. Do not operate the Stove with a broken or cracked glass. Replace only with heat resistant ceramic glass supplied by the manufacturer.

There are 2 things to keep an eye on during the cleaning process.

1. If the ash pan door or firebox door were left open for more than 60 seconds the Stove will go into safety shutdown. You will notice that the Stove quits augering corn into the burn pot. Toggle the On/Off switch off and back on. This will reset the board. You will need to use the auger button (#3) to manually feed corn into the pot for a couple of minutes until the program resumes.

2. If the stove has been running for an extended period of time on the #5 setting, the clinker will sometimes stick to the burn pot. If that happens, pull the coal rake back out. Open the door and use a long screwdriver and give the clinker a couple nudges in the pot. (Make sure the burnpot bottom is closed when you do this or you will lose the coals with the clinker) Then repeat the steps for dropping the clinker.

Remember: The coal rake must be pulled out and the slide bottom pushed in during normal operation of the stove. ***(See figure 6 on page 13)***

Remember: The fire door and ash pan doors must be in the latched position during normal operation of the Stove. ***(See stove layout in figure 1 on page 3)***

Periodic Maintenance

CAUTION: Periodic maintenance should only be done while the Stove is shut off and cold.

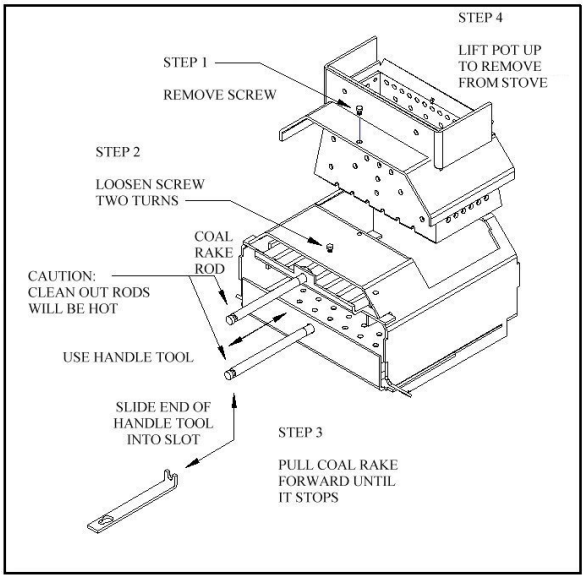

Figure 9
Burnpot & Slide-out Bottom Removal

1. **Ashpan.** Empty the ash pan when it appears full (approximately once a week). The frequency of cleaning the ash pan will depend on the quality and amount of Corn/Pellets being used. Carefully check to make sure the ash pan door is tightly closed after each opening.

2. **Burnpot and Slide-Out Bottom.** Clean burn grate holes whenever needed. Remove the Burnpot and use a small metal object (Nail, Drill Bit, etc) to clean out plugged holes. (*See Figure 9 & 10)*

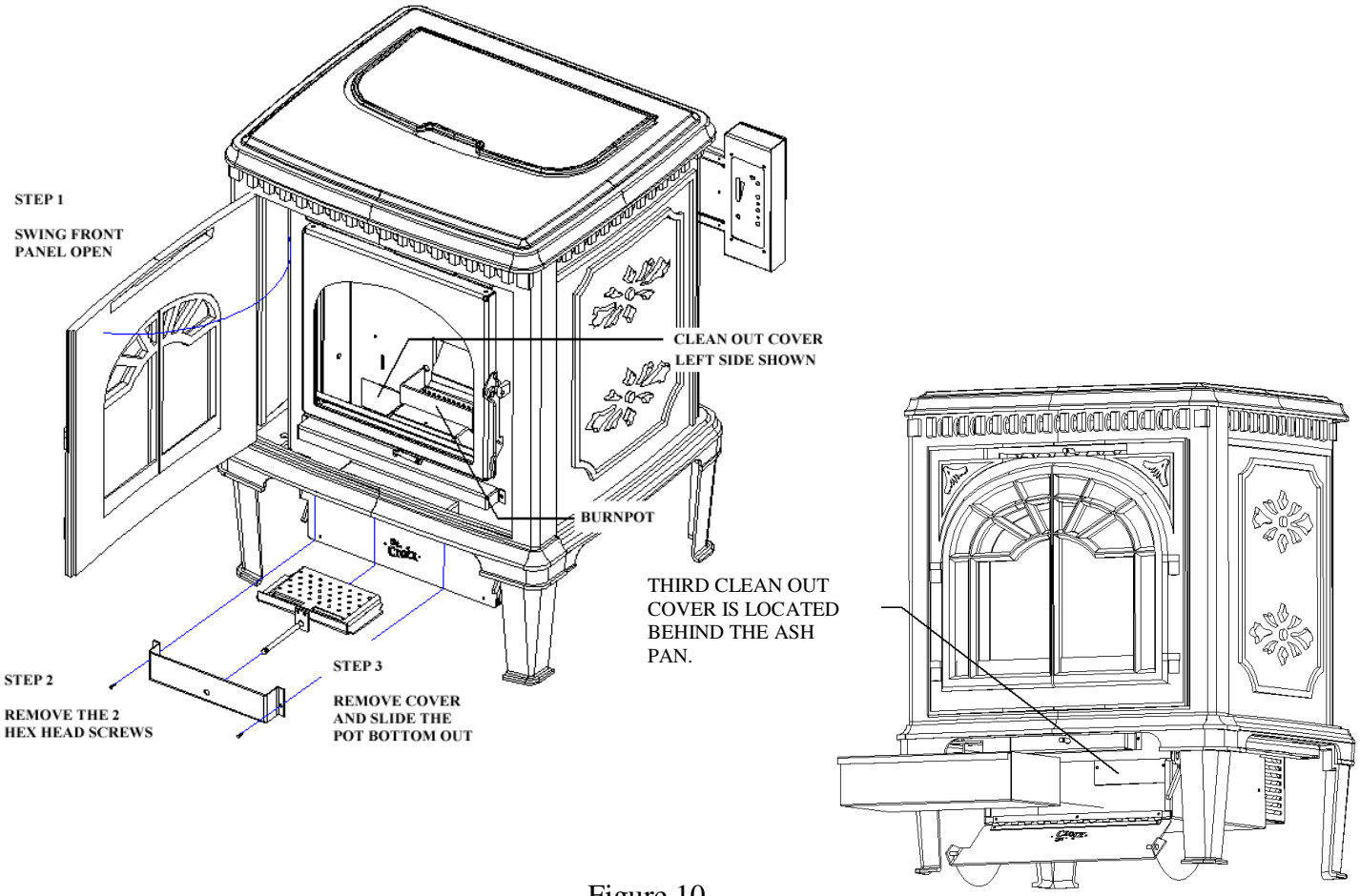

Figure 10

To remove the Burnpot from the stove, the Coal Rake must be pulled back so the pot will clear it. Open the Firebox door of the stove and you will see 2 Hex head screws. Follow steps 1 through 4 in figure 9 to remove the Burnpot from the stove. To remove the Slide-out Bottom, follow steps 1 through 3 in figure 10.

3. **Clean-Out Ports/Ash Traps.** The stove has 3 Exhaust Cleanout Ports located in the LEFT AND RIGHT lower corners of the firebox and a third Clean Out cover is located behind the ash pan. The Left Cleanout/Ash Trap Cover and the one behind the Ash Pan are shown in figure 10. Remove covers and clean with a vacuum regularly.

Frequency of cleaning depends on the amount of fuel being burnt and the quality of the fuel. Failure to clean the Ash Traps will cause the Stove to become plugged with Fly Ash.

4. **Heat Exchange Baffle.** Remove the baffle and clean the ashes that accumulate on a regular basis. Once a month or sooner, depending on the quality of fuel being used *(See Figure 11 on Page 18)*

Figure 11 shows how the baffle is removed from the Stove. Clean the baffle on a regular basis. Frequency of cleaning depends on amount of fuel being burnt and the quality of the fuel. **Failure to clean the Baffle can cause the stove to become plugged with Fly Ash.**

Baffle Removal

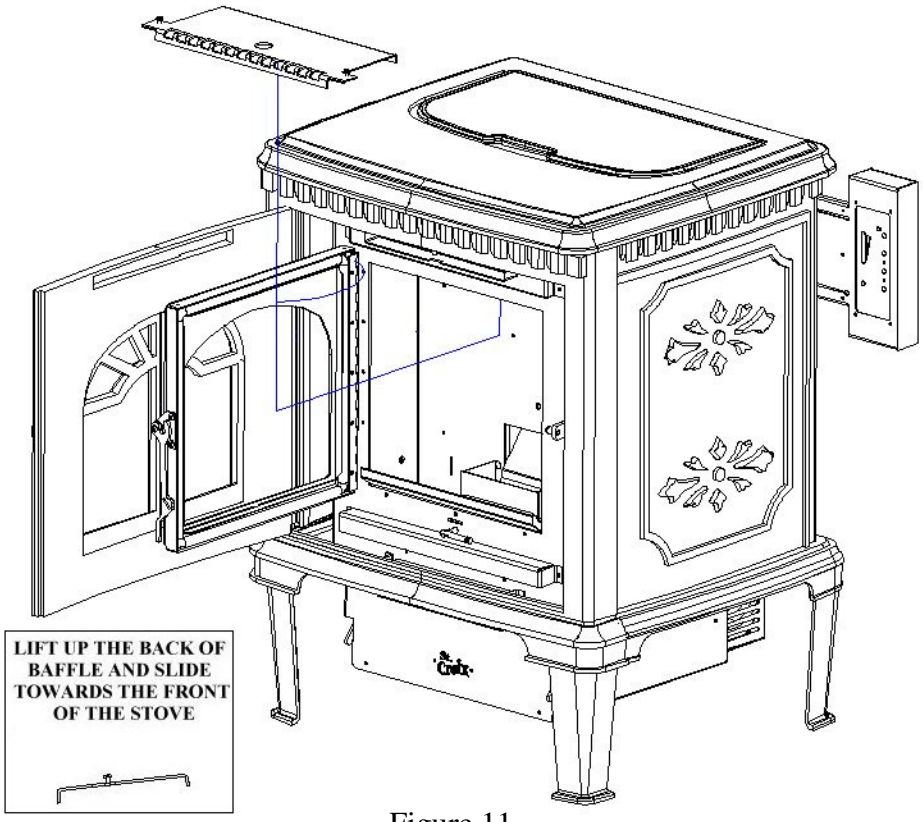

Figure 11

To remove the baffle, lift the back of the baffle up to clear the inner back of the stove and slide towards the front of the Stove. The baffle will slide out of the keyhole slots and drop down. ***When putting the baffle back in the stove, make sure the tabs are in the keyhole slots and the back of the baffle is lifted up over the inner back to keep the Baffle locked in place.***

5. **Exhaust System.** Periodic cleaning of the exhaust system is required. Under certain conditions chimneys may plug up rapidly. Dirty/High moisture content fuel and poor installations require more frequent chimney cleanings. **See Page 6 "Preventing Chimney Fires", if burning pellets.** The products of combustion will also contain small particles of fly ash. The fly ash will collect in the exhaust vent and restrict the flow of the flue gases. Judge the frequency of cleaning by checking the amount of ash that accumulates in the elbows or tee's of the exhaust system. Ask the dealer for suggested frequency of cleaning, equipment needed and procedures for cleaning. Check the Exhaust system and Ash Traps at least once every two months during the heating season.

6. **Gaskets.** Periodically inspect the condition of the rope gasket around the door, window and ash door. Replace as needed.

Many dealers offer a Service Contract that will cover Yearly Maintenance. Contact your St. Croix Dealer for assistance in maintaining your stove in top condition.

Yearly Maintenance

Yearly maintenance is designed to assure safe operation, prolong the life of the stove and help preserve its aesthetic appeal.

1. **Spring Shutdown.** After the last burn in the spring, cool the stove. Remove all corn from the hopper and the auger. Thoroughly clean the burn pot, burn pot box, ash pan and ash traps behind the ash pan. (To locate the ash traps see figure 10 on page 17)

2. The exhaust system should be thoroughly cleaned at least annually. Call your dealer for this service.

3. The motor/fan area behind the firebox and under the hopper should be vacuumed annually.

NOTE: UNPLUG THE STOVE. Open the access panels of the stove. Carefully clean or vacuum any dust, cobwebs and household dust. Carefully vacuum around the fan motors. If electrical wires become disconnected call your dealer for service.

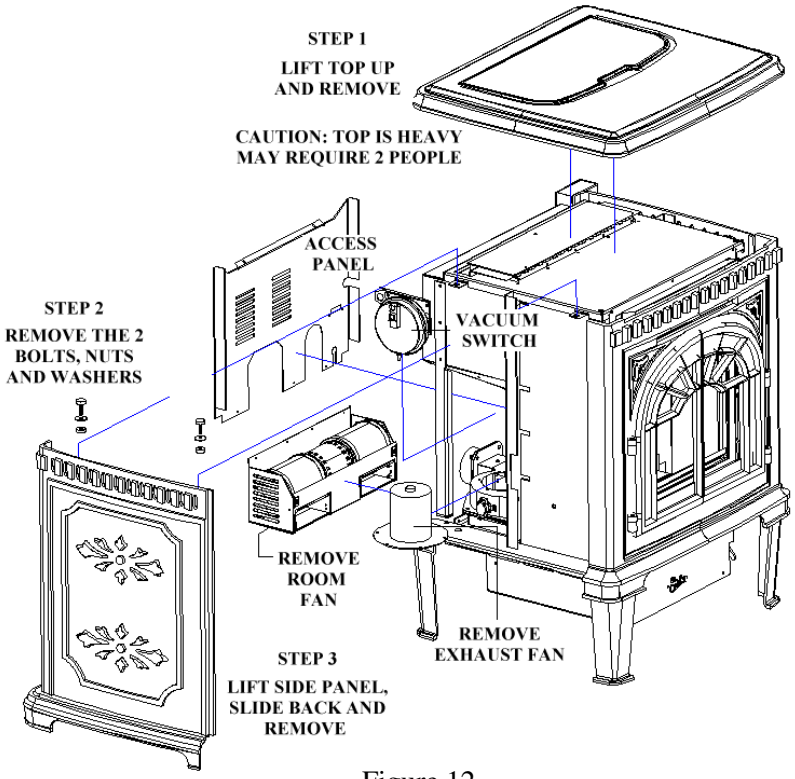

Figure 12

Note: The Vacuum Switch may be removed to allow easier access to the combustion fan

4. The exhaust fan should be removed (may require a new gasket) and cleaned with compressed air annually. Call dealer for this service. Annual oiling of the motors is not needed. (See Figure 12)

5. The Convection Blower should be removed and cleaned with compressed air annually. Annual oiling of the motors is not needed. (See Figure 12)

Fall Startup. Prior to lighting the first fire check the outside area around the exhaust and air intake systems for obstructions. Try all controls to see that they are working prior to lighting a fire.

SAFE OPERATION.

1. **Disposal of Ashes.** Ashes should be placed in a metal container with a tight fitting lid. The closed container of ashes should be placed on a non-combustible floor or on the ground, well away from all combustible materials, pending final disposal. If the ashes are disposed of burial in soil or otherwise locally dispersed, they should be retained in the container until all cinders have thoroughly cooled.

2. **Never use Gasoline,** gasoline type lantern fluid. Kerosene, charcoal lighter fluid or similar liquids to start or "freshen up" a fire in this heater. Keep all such liquids well away from the heater while it is in use.

3. **Creosote, Soot and Fly Ash:** Formation and Need for Removal. The products of combustion will contain small particles of Fly Ash. The fly ash will collect in the venting system and restrict the flow of flue gases. Incomplete combustion, such as occurs during start-up and shut-down, or incorrect operation of the room heater will lead to some soot or creosote formation which will collect in the venting system. The exhaust system should be inspected regularly during the heating season to determine if creosote buildup has occurred. Check more frequently at first to determine a schedule for cleaning the venting system based on individual use of this Corn, Wheat, Rye & Pellet-burning heater. If creosote has accumulated, it should be removed to reduce the risk of a chimney fire.

4. **Do not Overfire this unit.** Follow all instructions regarding the proper use of this heater.

CAUTION: The Electrical Components of the stove are not Owner Serviceable. Call your dealer for proper diagnosis of electrical problems and service to those components. See Installations Manual for a copy of the Wiring Schematic.

TROUBLESHOOTING & FRQUENTLY ASKED QUESTIONS

The stove is very trouble free in operation when properly maintained and quality fuel is used. When the stove fails to operate properly, troubleshooting by the operator of the stove is limited. Please read the following guide for answers to frequently asked questions

1. When first starting the stove remember the auger tube is empty, which will delay feeding fuel to the burn pot. This will in some cases prevent the stove from starting.

   Solution: Prime the burn pot if the auger tube is empty.

2. **My stove keeps overloading the burnpot.** First check the **Moisture Content** of your corn, wheat or rye. It should be 15% or less. Also make sure you are using clean corn, wheat or rye. Otherwise this is mainly caused by improper combustion (See ***Damper*** Adjustment section of the Operations Manual). Besides the damper adjustment there are several areas that can have an effect on the combustion process.

   Solution: Check all Gaskets, Doors and door Latching Systems for air leaks. Any leaks in these areas will negatively affect the burn process and cause the pot to overload. **Also make sure the slide out bottom is closed all the way**. If this is left open, combustion air will leak out the bottom of the Burn Pot area instead of being used in the combustion process.

3. **My stove runs for approximately 2 –4 hours and then overloads the burnpot.** What's wrong?

   Solution: This most likely means the combustion process is taking place on top of the "Coal Rake". During normal burning the "Coal Rake" must be pulled out of the burnpot. This causes the pot to fill up prematurely and overload. **The Coal Rake will be damaged if left in the Burn Pot for long periods of time.**

4. **My stove isn't burning and the number 2 Feed Light is blinking.** This diagnostic light indicates the vacuum switch no longer senses negative pressure in the firebox area of the stove. What caused the stove to go out?

   a. The door of the unit was left open longer than 60 seconds. **(See solution)**
   b. The ash pan door was left open for longer than 60 seconds. **(See solution)**
   c. The combustion fan is not running. (Defective fan or control board)
   d. The vacuum switch is defective.
   e. The vacuum hose is disconnected
   f. The vent system is plugged with fly ash.

   Solution: If the fire is out, re-light the stove. If the fire is still burning make sure all doors are securely latched and hold down the On/Off button (approximately 5 seconds) until stove starts up again. This will restart the stove in the start-up program. Occasionally use the auger button to manually feed fuel until the auto-feed takes over **(Auto feed will start 5 minutes after the stove has been restarted).**

5. **My stove isn't burning and the number 3 Feed Light is blinking.** This diagnostic light indicates that the Proof of Fire Switch no longer senses a fire in the stove. First check to see if there are pellets in the hopper. If there are pellets in the hopper, why did the stove go out?

   a. Unburned fuel in the Burn Pot means the fire went out before the Auger quit feeding.

   Solution: Adjust the air damper. (See section covering an ***Unbalanced Burnpot).*** Fuel will still feed until the P.O.F. switch eventually shuts the stove down. Adjust the damper. (See ***Damper Adjustment*** in the Operations Manual)

   b. The Burn Pot is empty means the Auger quit feeding fuel while there was still a fire in the burnpot. Check to see if there is fuel in the hopper. If the hopper is empty, fill the hopper and re-light the stove.

   c. If there is fuel in the hopper check to see if there is an obstruction in the auger system or if the auger set screw is loose.

   Solution: Remove obstruction and re-light the stove or tighten the setscrew on the auger shaft.

6. **My stove isn't burning and the #2 and #3 Feed Lights are blinking simultaneously.** These 2 lights diagnose the High Limit Switch and will indicate the stove reached an Over Temp situation.

   a. Check to see if the High Limit switch needs to be reset. If the High limit switch needs to be reset, do not use the stove until you find out why the High Limit tripped.

   b. The room air fan could be defective or the fan may need cleaning.

   c. The high limit switch also may be defective. It is best to call your dealer for support when trying to troubleshoot the High Limit Switch. Do not use your stove if the High Limit switch frequently trips.

7. **I lit the stove and the # 2 Feed Light immediately started blinking and smoke spills out of the stove.** How do I get the stove to quit smoking?

   Cause: The stove did not establish a vacuum and shut down. With the fuel in the pot burning, the smoke finds the path of least resistance and leaks out into the house. (See Installations Manual. Minimum vertical height needed to establish some natural draft and prevent smoke spillage)

   Solution: Pull the Slide-Out Bottom out and drop the fuel into the ash pan. This will minimize the amount of smoke that can spill into the room.

8. **I turned the stove on with the On/Off switch and nothing happens.** First check to see if the stove is plugged in and the receptacle has power to it.

   Solution: Check the fuse on the back of the control board. Replace with a 125 Volt, 5 Amp fuse (part number 80P20057-R).

9. **Why is my glass dirty?** Normal operation of your St. Croix stove will produce a white build-up on the glass that wipes off with a dry paper towel. However extended burning on the low setting only will produce a light tan color. These types of build-up on the glass are normal. A heavy black build-up on the glass could indicate a problem.

   Solution: a. Adjust the combustion air setting to the proper setting. If this doesn't seem to help, make sure the clean out cover plates are installed in the stove. It also could be an indication that the stove is getting plugged and needs a good cleaning. Refer to the section in the manual that covers the Daily, Periodic and Yearly Maintenance of the stove.

10. **How do I adjust my low burn (#1 setting)?** Not all fuel burns at the same rate. The moisture content of the corn, wheat & rye greatly influences the burn. Following is a description of the function of the Feed Trim button. The solution described first will most likely be the only one used while burning corn, wheat or rye. It would be unusual to use the trim button to decrease the feed when burning corn, wheat or rye.

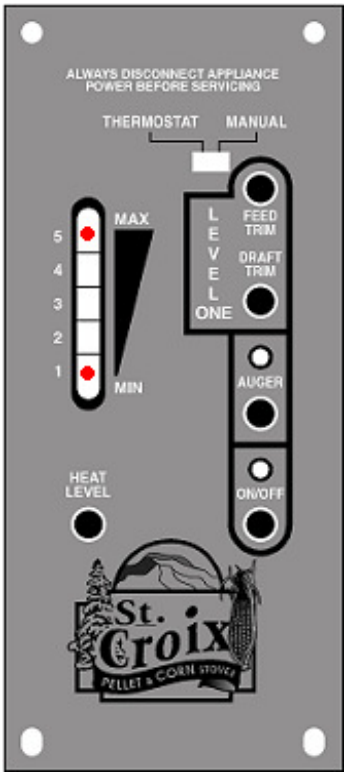

   Solution: The Feed Trim button on the control board allows the feed rate on #1 to be increased or decreased depending on the type of fuel used.

   a. Pressing the Feed Trim button once will turn the #1 and #5 light on at the same time. This is an increase of .25 seconds to the On-Time of the #1 setting.

   This is the **#1-High setting, 1.75 seconds**

   Using the Feed Trim button is also helpful when trying to keep the glass cleaner when burning on the #1 setting. The more fuel on low will usually mean less build up on the glass.

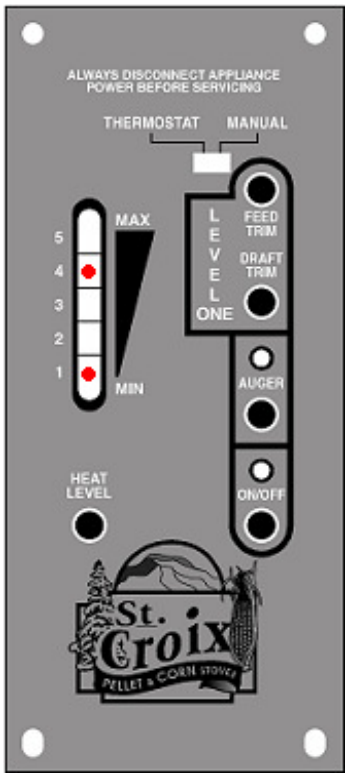

b. Pressing the Feed Trim button again will turn on the #1 and #4 light at the same time. This will decrease the feed rate by .25 seconds.

This is the **#1-Low setting, 1.25 seconds.** The #1 Low setting will give less heat, but will also cause more build-up to form on the glass.

11. **What does the Draft Trim Button do?** This button will rarely be used. In the event the stove is connected with a chimney system that has a strong Natural Draft, this button will allow the draft on the low (#1) feed setting to be adjusted, by reducing the voltages to the combustion fan. **The control board must be on the #1 setting to see the LED lights flashing.** By pressing the button the first time, the voltage will be reduced 5-8 volts. All LED lights will flash **once**. Pressing the button a second time will reduce the voltage another 5-8 volts. The LED lights will flash **twice,** indicating the second adjustment. Pressing the button a third time will return the control board to the default setting, and the LED lights will flash once.

Remember: Any of the above mentioned adjustments to the #1 setting on the control board will be lost if the unit gets unplugged or if there is a Power Failure.

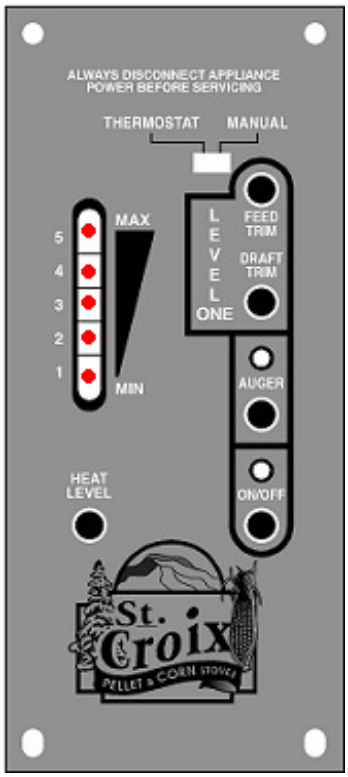

13. **The ON/OFF light blinks under certain conditions. Does this mean anything?**

a. The ON/OFF light blinking will mean one of two things. When the stove is first started and the stove is in the “Start-up” program, the light blinks until the “Proof of Fire” switch locks in. This indicates the “Normal Operation” and the light stays on constantly.

b. If the stove is running on a Thermostat it will start up as described in point (a), but during “Normal Operation” when the Thermostat is not calling for heat the stove drops to the #1 setting and “Pilots” until the thermostat calls for heat again. The LED light indicating the Heat Level will not drop to the #1 setting during “Pilot Mode”. During this time the ON/OFF light will be blinking, indicating that the stove is in “Pilot Mode”.

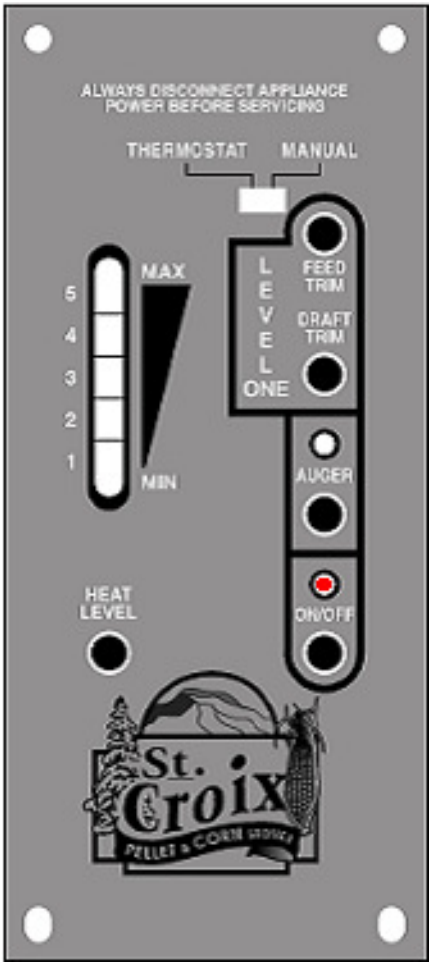

14. **The ON/OFF light is always blinking and the stove only runs on with a low fire, even though I have the Heat Level on #5.**

This usually indicates a problem in the Thermostat circuit. There is either a bad connection in the wires or the Thermostat itself has a problem. Troubleshoot all of the components in the system.

If the stove is not operating on a Thermostat, check the small jumper wire between the **Red and Black** connectors of the Thermostat wire Terminal on the back of the stove. (See page 20 of the Installations Manual, Thermostat Hook-up)

These questions and answers will usually solve most problems that you run into during the break in period of the stove or if a component fails in the stove. Before calling your dealer for assistance, please read your **Operations Manual** and perform all the maintenance issues covered in the **Daily and Periodic Maintenance** section of the Manual. If the stove still does not operate correctly call your Dealer for Assistance.

When installing the stove it is best to remove the castings to make it easier to handle. This makes the stove approximately 200 Lbs. lighter. It disassembles in four easy steps: top assembly, left and right sides and finally the front assembly

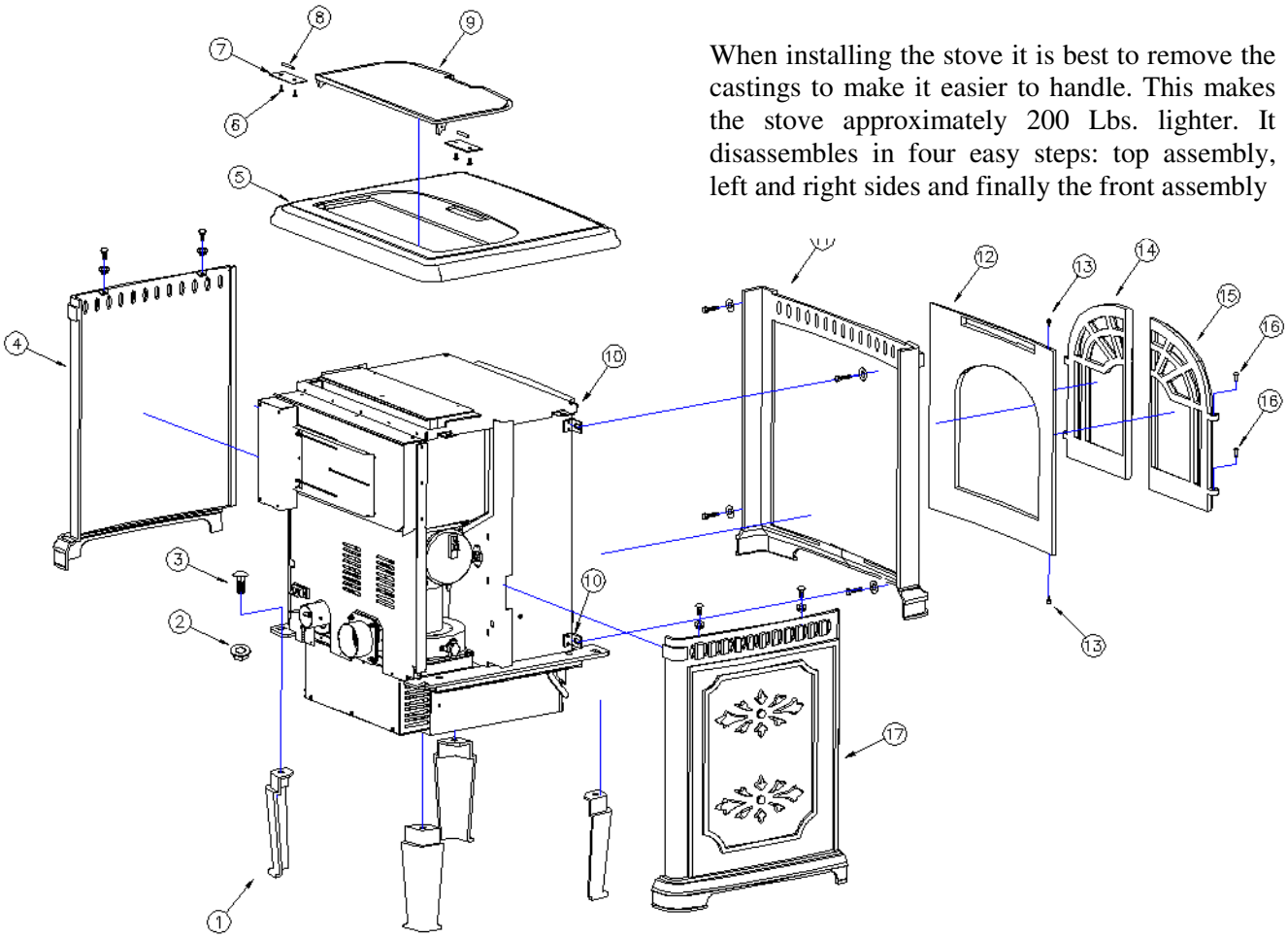

Greenfield Cast iron Parts

#	PART NUMBER		DESCRIPTION
	BLACK	FERRIS GRAY	
1	80P20083-R	80P20083-GR	CAST LEG
2	1/2HFW	←	1/2-13 WHIZNUT
3	1/2X1-1/2CB	←	1/2-13 X 1-1/2 CARRIAGE BOLT
4	80P20090-R	80P20090-GR	CAST SIDE PANEL - RIGHT
5	8OP20088-R	80P20088-GR	CAST TOP
6	80P20102-R	←	MOUNTING SCREWS – CAST HOPPER LID
7	80P20108-R	←	MOUNTING PLATE – CAST HOPPER LID
8	80P20099-R	←	HINGE PINS – CAST HOPPR LID
9	80P20089-R	←	CAST HOPPER LID
10	80P52650-R	←	MOUNTING BRACKET – CAST FRONT PANEL
11	80P20093-R	80P20093-GR	CAST FRONT FRAME
12	80P20094-R	80P20094-GR	CAST FRONT PANEL
13	80P20100-R	←	HINGE PINS - CAST FRONT PANEL
14	80P20098-R	80P20098-GR	CAST DOOR – RIGHT
15	80P20097-R	80P20097-GR	CAST DOOR - LEFT
16	80P20101-R	←	HINGE PINS – CAST DOORS
17	80P20092-R	80P20093-GR	CAST SIDE PANEL - LEFT

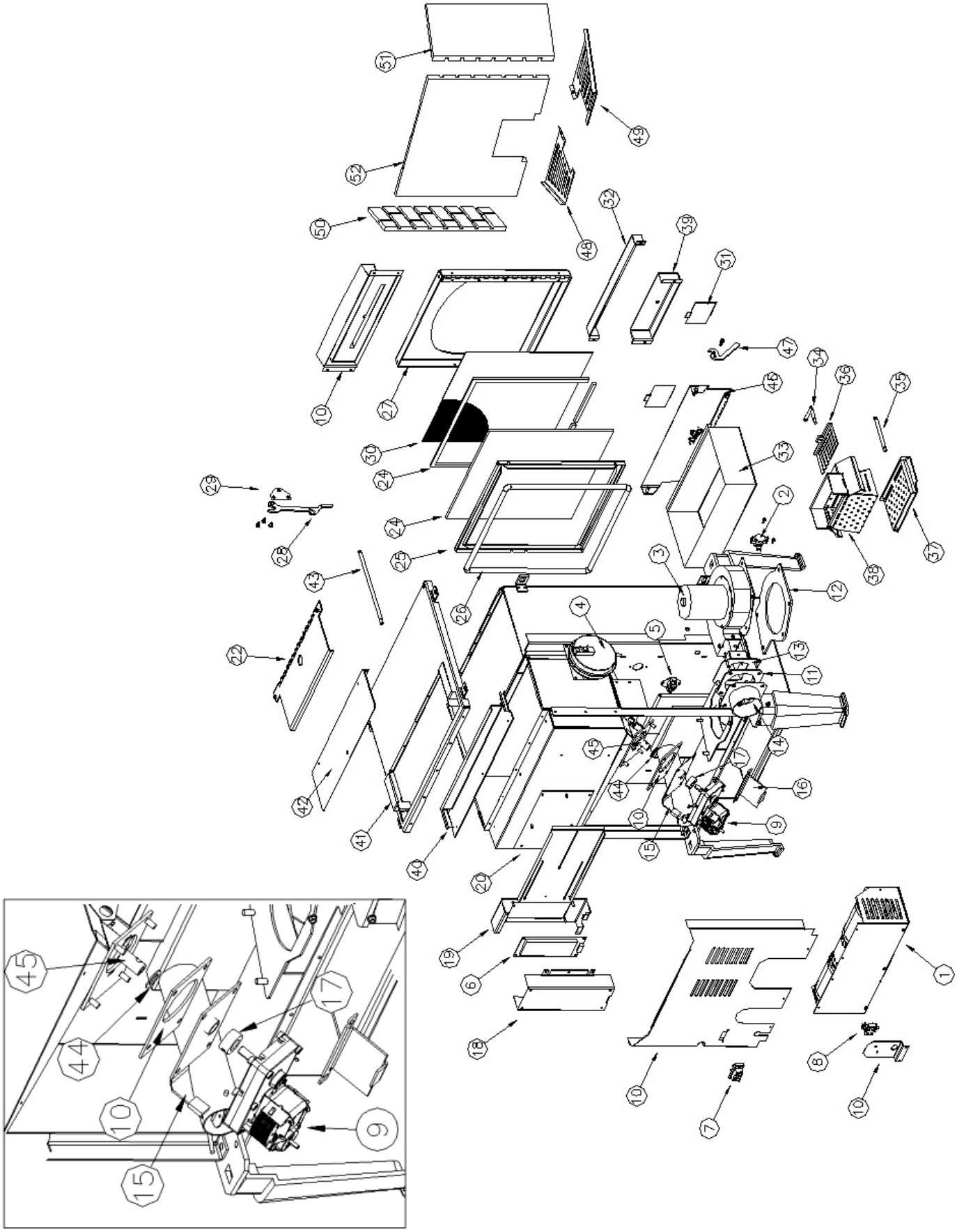
51
52
50
49
48
32
39
31
47
34
36
35
46
33
37
38
2
12
13
11
14
16
9
15
10
17
44
45
4
5
3
20
19
6
18
1
8
10
7
10
10
27
30
24
21
25
26
29
28
43
22
42
41
40

#	PART NUMBER	DESCRIPTION
1	80P53670-R	CONVECTION FAN ASSEMBLY
2	80P20038-R	PROOF OF FIRE SWITCH
3	80P20001-R	COMBUSTION FAN
4	80P52628-R	VACUUM SWITCH
5	80P52629-R	MANUAL RESET HIGH LIMIT
6	80P52632-R	CONTROL BOARD
7	80P30045-R	T-STAT WIRE TERMINAL
8	80P52630-R	WIRING TERMINAL BLOCK
9	80P20278-R	AUGER MOTOR
10	80P20245-R	AUGER GASKET
11	80P52232-R	QUICK DISCONNECT GASKET
12	80P20168-R	COMBUSTION FAN GASKET
13	80P53650-R	EXHAUST ADAPTER WELDMENT
14	80P52887-R	PIPE CONNECTOR ASSEMBLY
15	80P52957-R	AUGER MOUNT BRACKET ASSEMBLY
16	80P30191-R	AUGER MOTOR RETAINER BRACKET
17	80P20248-R	5/8” COLLAR WITH SETSCREW
18	80P52658-R	CONTROL BOARD COVER
19	80P53785-R	CONTROL BOARD MOUNT BOX
20	80P53681-R	SLIDE TOP STANDOFF PLATE
21	80P20183-R	PLASTIC HOPPER HANDLE
22	80P52944-R	HEAT EXCHANGE BAFFLE
23	80P52375-R	GLASS FOR DOOR
24	80P20022-R	GLASS GASKET KIT
25	80P52357-R	GLASS RETAINER
26	80P20132-R	DOOR GASKET KIT
27	80P52947-R	DOOR FRAME WELDMENT
28	80P53773-R	DOOR HANDLE
29	80P53677-R	HANDLE MOUNT PLATE ASSEMBLY
30	80P52773-P	DOOR SCREEN
31	80P52237-R	ASH CLEANOUT COVER
32	80P30043-R	ASH LIP BOX
33	80P53633-R	ASH PAN
34	80P53759-R	COAL RAKE ROD ASSEMBLY
35	80P52592-R	SLIDE OUT BOTTOM ROD
36	80P53619-R	COAL RAKE
37	80P53743-R	SLIDE OUT BOTTOM - GREENFIELD
38	80P53618-R	CORN/WHEAT/RYE POT
39	80P30017-R	SLIDE OUT BOTTOM SNOUT COVER
40	80P52679-R	REAR HOPPER SEAL
41	80P53684-R	FALSE TOP ASSEMBLY
42	80P53682-R	HOPPER LID ASEMBLY
43	80P52567-R	TUBE SCRAPER ROD
44	80P50858-R	AUGER BUSHING WASHER
45	80P52956-R	AUGER WELDMENT
46	80P53632-R	BELLY PAN DOOR WELDMENT
47	80P52645-R	BELLY PAN DOOR HANDLE
48	80P30047-R	DECORATIVE GRILL - LEFT
49	80P30048-R	DECORATIVE GRILL - RIGHT
50	80P30570-R	RIGHT BRICK PANEL - STEEL
51	80P30571-R	BACK BRICK PANEL - STEEL
52	80P30569-R	LEFT BRICK PANEL - STEEL

St. Croix Stove
WARRANTY

The stove manufactured by Even Temp, Inc. is warranted for five (5) years, to the original owner, against defects and workmanship on all steel parts (excluding the burn grate) and two (2) year on electrical components from the date of sale to the original owner. There specifically is no warranty on the paint, glass, burn grate and all gaskets. There is no written or implied performance warranty on the stove, as the manufacturer has no control over the installation, daily operations, maintenance or the type of fuel burned.

This warranty will not apply if the stove has not been installed, operated and maintained in strict accordance with the manufacturer's instructions. Burning other than quality corn, wheat, rye or pellets may cause stove damage and could void the warranty.

The warranty does not cover damage or breakage due to misuse, improper handling or modifications.

A warranty registration card is provided. The card is to be checked and signed and returned to factory, by the owner. Appropriate information is to be noted on the card.

All claims under this warranty must be made through the dealer where the stove was purchased. If an inspection by the dealer indicates that a warranty claim is justified, and that all conditions of this warranty have been met, the manufacturer's total responsibilities and liabilities shall be to repair or replace, at the manufacturer's option, the defective part(s). All costs of removal, shipment to and from the dealer or manufacturer, any losses during shipment and reinstallation and any other losses due to the stove being removed shall be covered by the owner of the stove.

NEITHER THE MANUFACTURER, NOR THE SUPPLIERS TO THE PURCHASER, ACCEPT RESPONSIBILITY, LEGAL OR OTHERWISE, FOR THE INCIDENTAL OR CONSEQUENTIAL DAMAGE TO PROPERTY OR PERSONS RESULTING FROM THE USE OF THIS PRODUCT. ANY WARRANTY IMPLIED BY LAW, INCLUDING BUT NOT LIMITED TO IMPLIED WARRANTIES OF MERCHANTABILITY OR FITNESS, SHALL BE LIMITED TO ONE (1) YEAR FROM THE DATE OF ORIGINAL PURCHASE. WHEN A CLAIM IS MADE AGAINST THE MANUFACTURER BASED ON THE BREACH OF THIS WARRANTY OR ANY OTHER TYPE OF WARRANTY EXPRESSED OR IMPLIED BY LAW, MANUFACTURER SHALL IN NO EVENT BE LIABLE FOR ANY SPECIAL, INDIRECT, CONSEQUENTIAL OR OTHER DAMAGES OF ANY NATURE WHATSOEVER IN EXCESS OF THE ORIGINAL PURCHASE PRICE OF THIS PRODUCT. ALL WARRANTIES BY MANUFACTURER ARE SET FORTH HEREIN AND NO CLAIM SHALL BE MADE AGAINST MANUFACTURER ON ANY ORAL WARRANTY OR REPRESENTATION.

Some states do not allow the exclusion or limitation of incidental or consequential damages, or limitations of implied warranties, therefore the limitations of exclusions set forth in this warranty may not apply to you. This warranty gives you specific legal rights, and you may have other rights, which vary from state to state.

Notes

After the break in period, please note any adjustments that were made to the Feed Trim and Draft Trim on the control board in the area below. In the event of a power failure or if the units gets unplugged the trim settings will be lost.

Draft Trim: Circle one (See point 4 on page 7)

Default Draft **Low Draft** **High Draft**

Feed Trim: Circle one (See point 5 on page 7)

Default #1 **#1-High** **#1-Low**

Serial Number:

Date of Purchase:

Dealer Information:

Even Temp, Inc.
P.O. Box 127
Waco, NE 68460

EMAIL: support@stcroixstoves.com

WEB ADDRESS: www.stcroixstoves.com