Installation & Operations Manual

Lincoln SCR
Multi-Fuel Stove

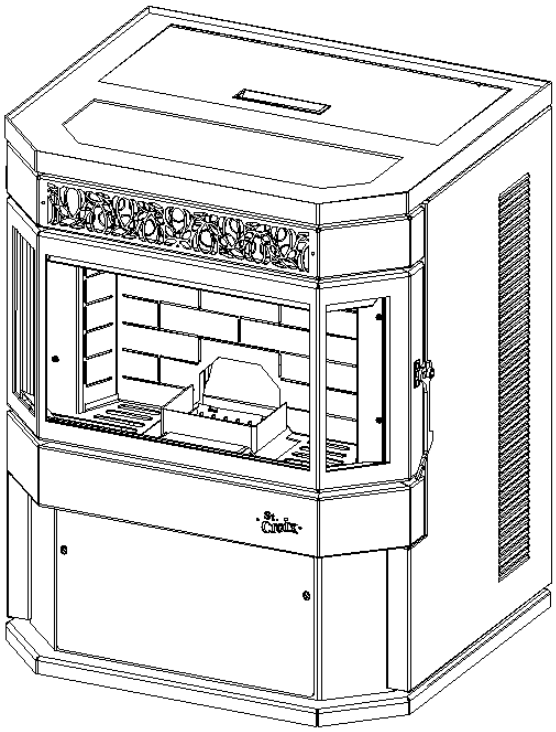

"Please read this entire manual before installation and use of this pellet fuel-burning room heater. Failure to follow these instructions could result in property damage, bodily injury or even death."

"Contact local building or fire officials about restrictions and installation inspection requirements in your area.

Save these Instructions
210

TABLE OF CONTENTS

Quick Start Guide (Read this First) 4-7

General Information 8

Installation Check List 9

Stove Layout Diagram 10

Stove Dimensions 11

Approved Installations 12

Exhaust Venting 14

- Venting - Approved Materials 14
- Venting-Typical PL Vent Components 15
- Venting - Determining Materials 16
- Venting - Termination Requirements 17, 18
- Venting: Termination Clearance Requirements 19
- Venting – Into an existing Chimney 20
- Venting – Hearth Mount 21

Floor Protection 22

Minimum Clearances to Combustible Materials 23, 24

Outside Combustion Air 25

Mobile Home Installation 26, 27

Thermostat 28

Installation Check 29

Preventing Chimney Fires 29

Approved Fuels 30

Pellets, Corn, Wheat, Rye, Cherry Pits & Distiller's Grain 30

The Revolution Burn System 31-33

Self Ignition 34, 35

Control Board Features 36, 37

Thermostat function 37

Pre-Lighting Instructions 38, 39

Changing the Program on the Control Board 39

Lighting your Stove 40

Shutting Off the Stove 41

Combustion Air Damper Adjustment 41-44

Damper Adjustment & Pilot Setting, Thermostat Control 44

Diagnostic & Safety Features 45, 46

Lincoln SCR Maintenance 47

Daily Maintenance 47

Periodic Maintenance 48-50

Yearly Maintenance 51, 52

Safe Operation 52

Wiring Schematic 53

Parts Layout 54-57

Troubleshooting & Frequently Asked Questions 58-62

Warranty 63

Stove Settings & Notes 64

Installation & Operations
Quick Start Guide

The information in this Quick Start Guide is intended to give a better explanation of how the new Revolution Burn System works and should be used along with the information given in the regular stove manual.

How to adjust the Lincoln SCR for different Fuels?

The Lincoln SCR is approved for 6 fuels. They are Pellets, Cherry Pits, Corn, Wheat, Rye and Distiller's Grain pellets. *Read pages 38 and 39 for information on choosing the correct program for the fuel of choice.*

They are grouped in 2 categories:

1 – Pellets and Cherry Pits, lower in Moisture Content and easy to ignite.

2 – Corn, Wheat, Rye and Distillers Grain, these fuels are higher in Moisture Content and therefore more difficult to start.

The Lincoln SCR basically has 2 operating modes:

1 - **Manual Mode.** In this mode the operator of the Lincoln SCR is involved with starting the unit, and is available to monitor the start-up process of the Lincoln SCR. This mode includes the Manual position and the T-Stat thermostat position. ***Only the ON/OFF button will start the unit up or shut the unit down.***

2 – **SmartStat Mode** is the Automatic Mode. In this mode the Thermostat controls the unit. The Lincoln SCR starts as soon as the Thermostat calls for heat. The unit shuts off only after the unit pilots for 1 hour with out calling for heat. **If Operating in the SmartStat Mode, make sure the Thermostat is not calling for heat when trying to shut the Lincoln SCR off at the Control Board. Turning the Lincoln SCR off at the Control Board while the Thermostat is calling for heat, will cause the Control Board to turn the unit right back on.**

During the Break-In period and anytime a switch is made to a different Fuel Category, such as switching from Pellets or Cherry Pits (which have a lower moisture content and starts quicker) to burning Corn, Wheat, Rye and Distiller's Grain (which have a higher moisture content and start slower), the Lincoln SCR must be set up and adjusted for proper ignition. This means the Damper, Program, Feed and Draft Trim settings must be adjusted in such a manner that after the ignition cycle finishes, the unit transitions to the fuel in the main hopper in a smooth manner without overloading the pot.

How to use T-Stat and SmartStat Mode with the Revolution Technology. (*Read page 28 and page 44 for more information on using a Thermostat*)

SmartStat Mode is to be used when the temperatures are mild. Adjust the Control Board for mild temperatures. Run the Lincoln SCR on the lower settings on the control board to prevent the unit from cycling on and off needlessly. If the temperature is 50 degrees outside, it would make sense to run the Lincoln SCR in SmartStat Mode but with the Heat Level set on #1.This way the unit puts out less heat and will run longer before temperatures in the house rise above the Thermostat setting. This also provides a more even temperature.

When burning Corn, Wheat, Rye and Distiller's Grain Pellets, the program chosen must give a smooth ignition and be able to advance to the Heat Level chosen. If the Pot overloads during ignition, adjust the Feedrate down or switch Programs until these fuels ignite without overloading the Pot. The units must be adjusted for unattended use.

Do not assume the unit functions correctly in SmartStat mode without first adjusting the unit. When burning grain there are many variables and the unit must be fine tuned correctly before using SmartStat Mode.

The adjustments that need to be made are:

1 - Choosing the correct Program for the fuel used. (See pages 38-39 in your manual)
2 - Adjusting the Damper (if needed) (See pages 41-43 in your manual)
3 - Adjusting the Feedrate (if needed) (See point 8 on page 61)
4 - Adjusting the Draft Fan Voltage (if needed) (See point 9 on page 61)
5 - Adjusting the Heat Level to a lower setting (to prevent the Lincoln SCR from excessive ON/OFF cycling). This will also help in maintaining an even temperature in the home. (See figure 23 on page 36) Moving to the next Program will also produce less heat. (See pages 38-39 in your manual)

If the Revolution pot overloads during the Ignition Phase, simply open the Hopperlid to stop the Auger Motor in the main hopper. This will temporarily shut off the fuel that is being fed to the pot until it balances back out.

Use the 5-point list above and make some small adjustments before starting the unit the next time. Again observe how the unit starts up and repeat this process until you get a smooth ignition when burning Grains.

The Revolution Pot – How to deal with a jammed pot.

What can cause the pot to get jammed?

a – A foreign object gets stuck in the Drum as it rotates through. For this to happen, the object must first make it through the Auger system in the hopper. Most likely it would jam the auger, but is some instances it could end up in the pot.

b – The Drum rotates while it is full of unburned fuel. If this happens the dividers in the drum could get stuck on the fuel as that section of the pot rotates through. It jams where the dividers close the opening where the Ash and Clinker material exit the pot.

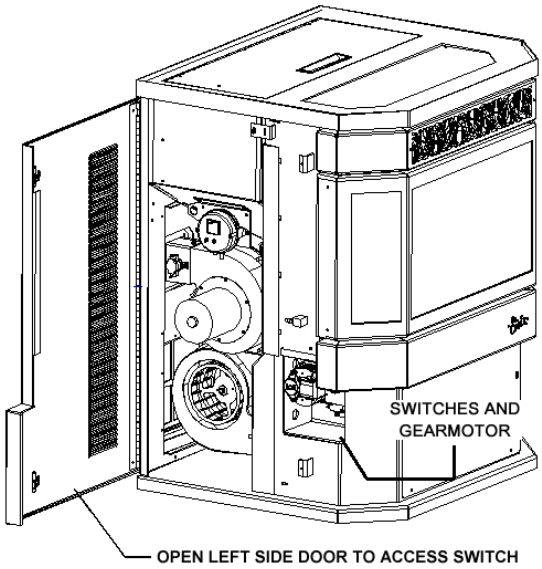

Figure1

How to fix the problem if it happens?

If this happens, ***first unplug the unit*** and use a vacuum to clean out the fuel or ash in the pot. To clear a foreign object may require reversing the motor by hand. Figure 1 shows how to access the area where the Switches and Revolution gearmotor are located.

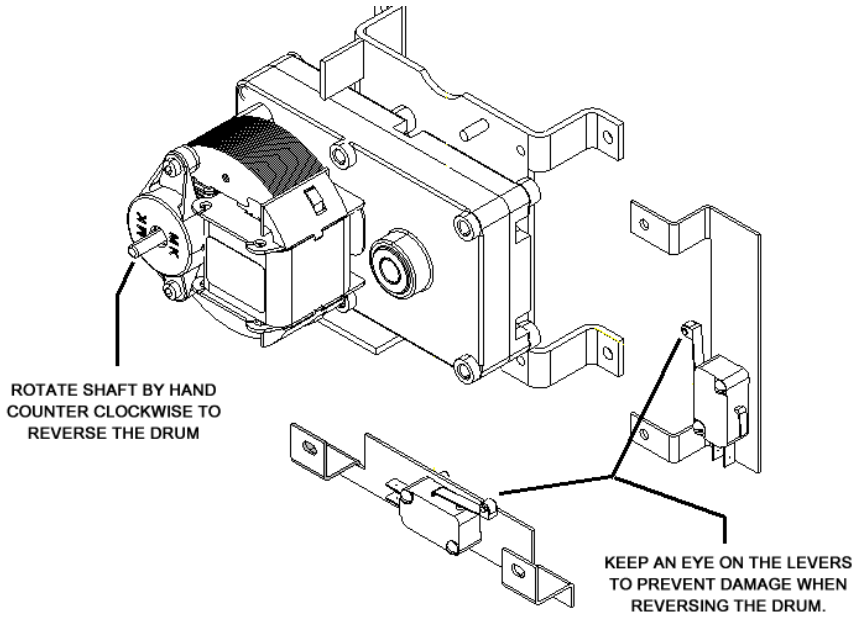

Figure 2

Keep an eye on the 2 switch levers shown in figure 2. They eventually will end up against the end of the notches shown in figure 3. Rotating any further than that will bend the levers and potentially damage the switches.

To clear a jam will usually only require the drum to be reversed a small amount for the object or the fuel to free up.

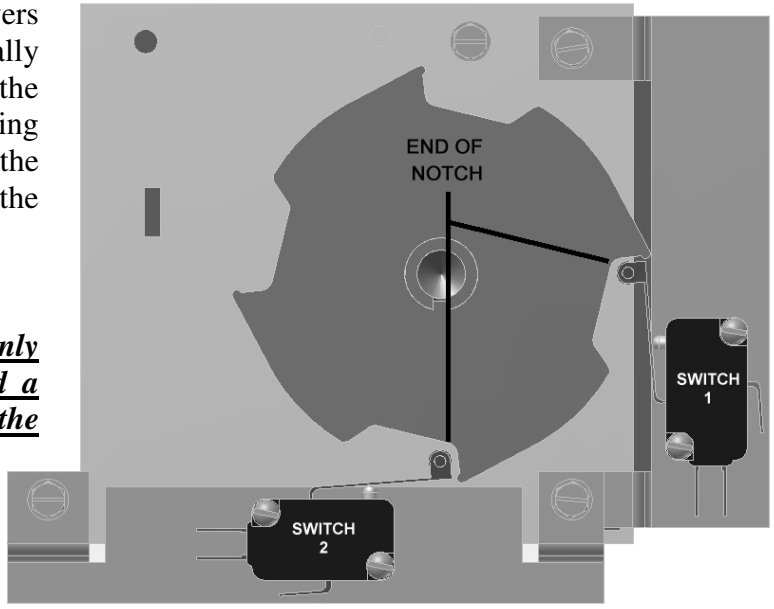

Figure 3

Once the jam has been cleared, simply plug the unit back in and the drum will rotate through and stop in the correct position.

There is one other situation that could jam the drum. When burning Corn, Wheat, Rye or Distillers Grain Pellets the by-product of these fuels is a hard clinker. If the pot jams up on the Clinker material, the procedure to clear the drum is a little different from the methods listed earlier.

Remember to first unplug the unit before trying to clear the jam. The clinker material may be stuck to the "Divider Fingers" in the drum. This Clinker material is hard and easily breaks up using a hammer and screw driver to break it in smaller pieces.

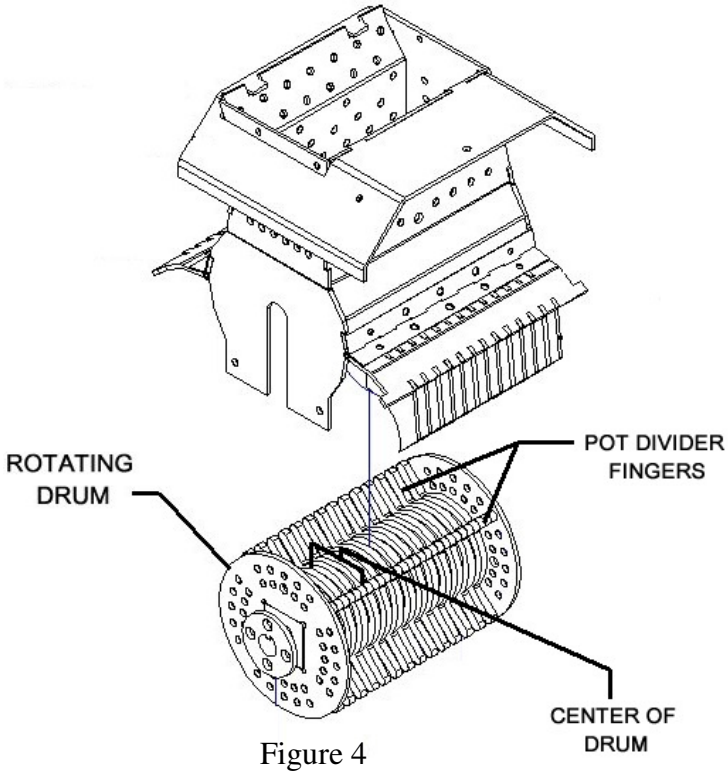

Figure 4

Figure 4 shows the Drum outside of the burnpot for a clearer view. Note the "Divider Fingers" and the "Center" of the Drum.

When breaking up a Clinker use caution not to hit directly on the divider fingers as this may bend them and cause them to bind on the "Cutters". Break the Clinker up in the area described as the "Center of Drum"

How to prevent the Clinker from causing the Drum to jam?

The fuels that create Clinkers are approved with Programs 2 through 4 on the Control Board. The Clinker can be different in consistency based on the different varieties of corn, wheat, rye and distillers grain pellets that are grown or produced throughout the US. If this seems to be a problem, simply choose the next program on the Control Board.

For Example: If you are operating in Program 2, simply change to Program 3. This will cause the Clinker to be smaller and less likely to jam up during the cleaning process.

Helpful Hint - *The Small Hopper used for starting the stove holds enough pellets to start the unit and run the unit continuously until the main hopper is empty.*

When running the unit in SmartStat Mode it will start the unit 6 times before running out of pellets. Be sure to keep the small hopper filled up when unit is starting frequently.

Optional Hopper Extension, Part # 80P54093, is available for a larger Hopper Capacity.

GENERAL INFORMATION
SAFETY PRECAUTIONS

SAFETY NOTICE: The Stove must be properly installed in order to prevent the possibility of a house fire! These installation instructions must be strictly observed! The Maintenance schedule must be followed as described in this manual. Failure to follow instructions may result in property damage, bodily injury or even death.

The Stove's exhaust system works with negative combustion chamber pressure and a slightly positive chimney pressure. Therefore, it is imperative that the air intake and exhaust system be airtight and installed correctly. Do not install a flue damper in the exhaust vent of this unit.

Do not connect this unit to a chimney flue serving another appliance.

BUILDING PERMIT

Contact the local building officials to obtain a permit and information on any local installation restrictions and inspection requirements.

DEFINITION OF "STOVE"

The word "Stove" as used in this manual is interpreted to mean a "Multi-Fuel Stove" approved for the fuels listed in this manual. This model is not intended as the sole source of heat.

SAFETY TESTING

The stove has been independently tested and listed by Warnock Hersey Laboratories in accordance with the proposed ASTM Standards and the applicable portions of UL 1482 and ULC S627/B366.2, and Oregon Administrative Rules 814-23-901 through 814-23- 909, stating requirements for installation as a stove, heater or hearth insert for masonry, metal and zero clearance fireplaces and for mobile home installations. The safety-listing label is located on the back of the stove.

DISCLAIMER OF WARRANTY

Since Even Temp Company has no control over the installation of the Stove, Even Temp Company grants no warranty, implied or stated, for the installation of the Stove and assumes no responsibility for any special, incidental or consequential damages.

MANUFACTURED BY:

Even Temp Inc
Hwy 34
Waco, NE, 68467

BEFORE INSTALLATION THOROUGHLY READ AND UNDERSTAND THIS MANUAL

SAFETY NOTICE

PLEASE READ THE ENTIRE MANUAL BEFORE INSTALLING AND USING YOUR NEW STOVE. FAILURE TO FOLLOW INSTRUCTIONS MAY RESULT IN PROPERTY DAMAGE, BODILY INJURY, OR EVEN DEATH.

INSTALLATION CHECK LIST

FOR USE IN THE U.S. AND CANADA

MOBILE HOME APPROVED

CHECK WITH LOCAL AUTHORITIES AND OBTAIN NEEDED PERMITS

WE RECOMMEND INSTALLATION BY A QUALIFIED PROFESSIONAL.

BEFORE STARTING THE STOVE FOR THE FIRST TIME

1. Under certain conditions outside combustion air is recommended. Use only approved parts. When using outside air for combustion, check that the outside air inlet is connected to draw fresh air from outside the building.

2. All joints of PL vent and single wall stainless steel pipe should be fastened by at least 3 screws and correctly installed. (Follow vent manufacturer's instructions). Seal all joints with high temperature silicone to create an airtight seal.

3. WARNING: The high temperature paint on this Stove may take several hours of burning at a high fuel setting to cure fully. During this time, an odor that is not harmful may be evident. When odors are present, the area around the Stove should be well ventilated.

4. Caution: The high temperature paint can be easily scratched prior to burning the Stove.

CAUTION: FAILURE TO FOLLOW THE INSTRUCTIONS IN THE INSTALLATIONS MANUAL MAY RESULT IN A HOUSE FIRE. PLEASE FOLLOW INSTALLATION AND MAINTENANCE INSTRUCTIONS.

Lincoln SCR

Stove Layout

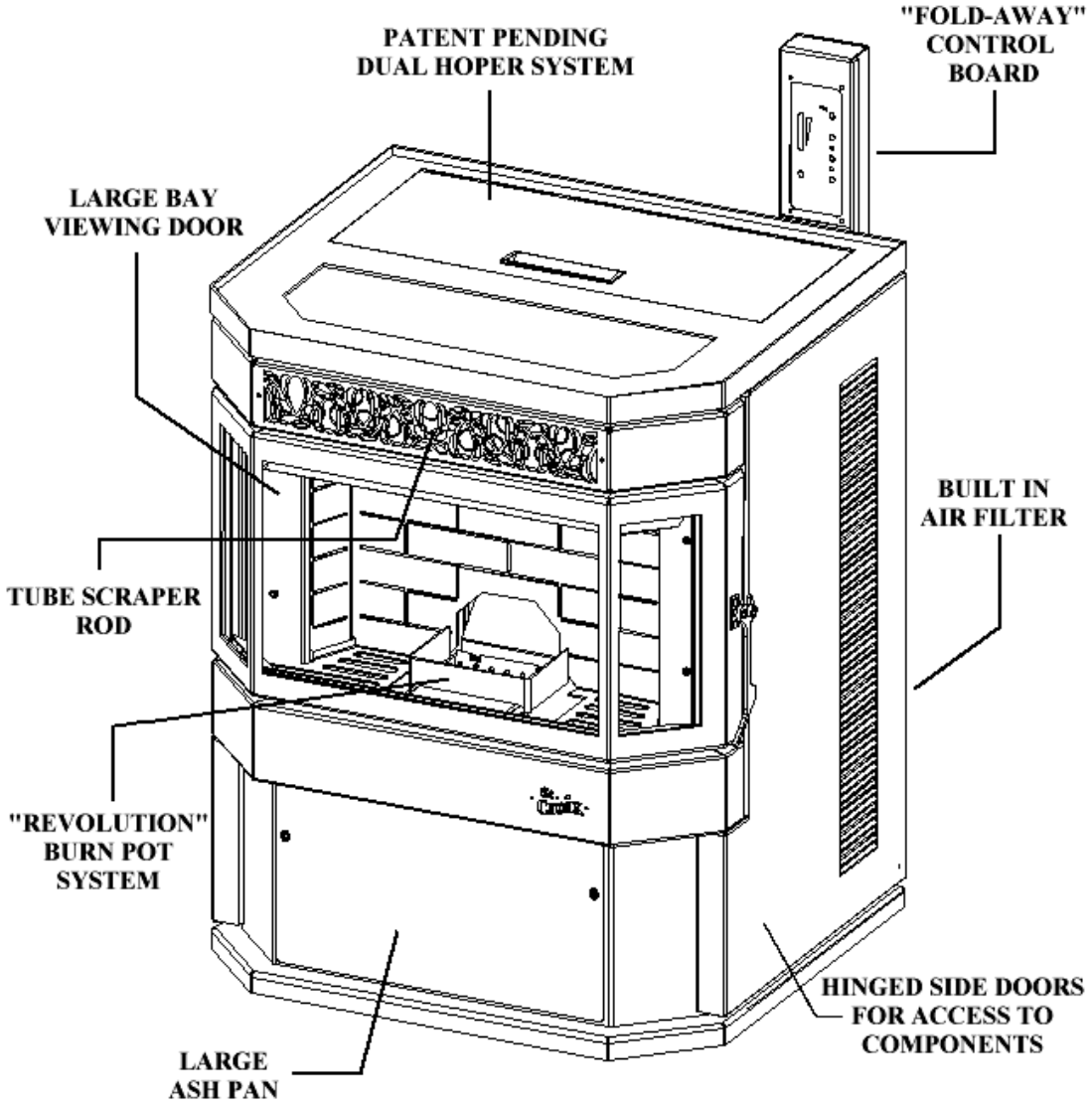

Figure 1

The burn system used in the Lincoln SCR is the St. Croix Patent Pending "**Revolution Burn System".** This burn system is Self-Cleaning and Self-Igniting during operation. This system utilizes a Patent Pending **Dual Hopper System** that uses wood pellets to ignite the Fuel that is in the main hopper. It is approved for Pellets, Corn, Wheat, Rye, Cherry Pits & Distillers Grain Pellets.

STOVE DIMENSIONS

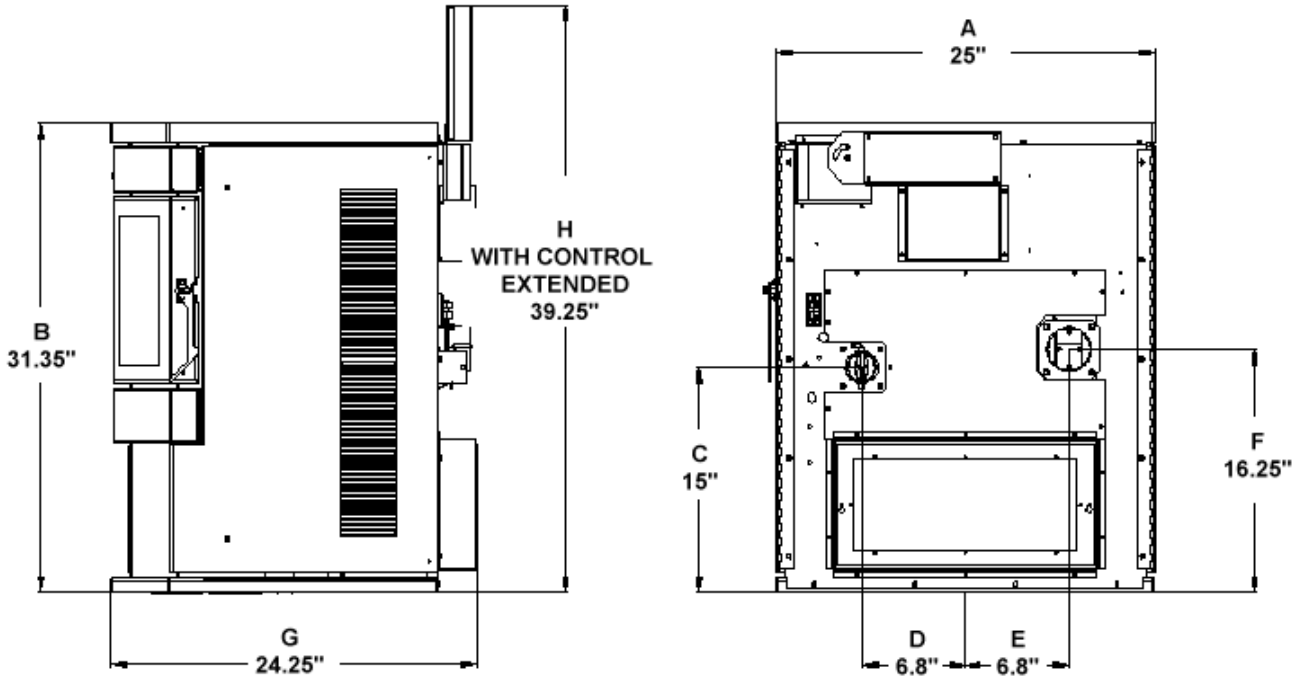

Figure 2
Rear & Side View

A – Width of Stove

B – Height of Stove

C – Center of Air Intake from Floor

D – Center of Stove to Center Intake

E – Center of Stove to Center of Exhaust

F – Center of Exhaust from the Floor

G – Depth of Stove

H – Height of Stove with Control Extended

Approved Installations

The Lincoln SCR is approved for CONVENTIONAL and MOBILE HOME installations as a FREESTANDING stove. The stove may also be installed on the Hearth in front of a fireplace and vented through the chimney of the fireplace.

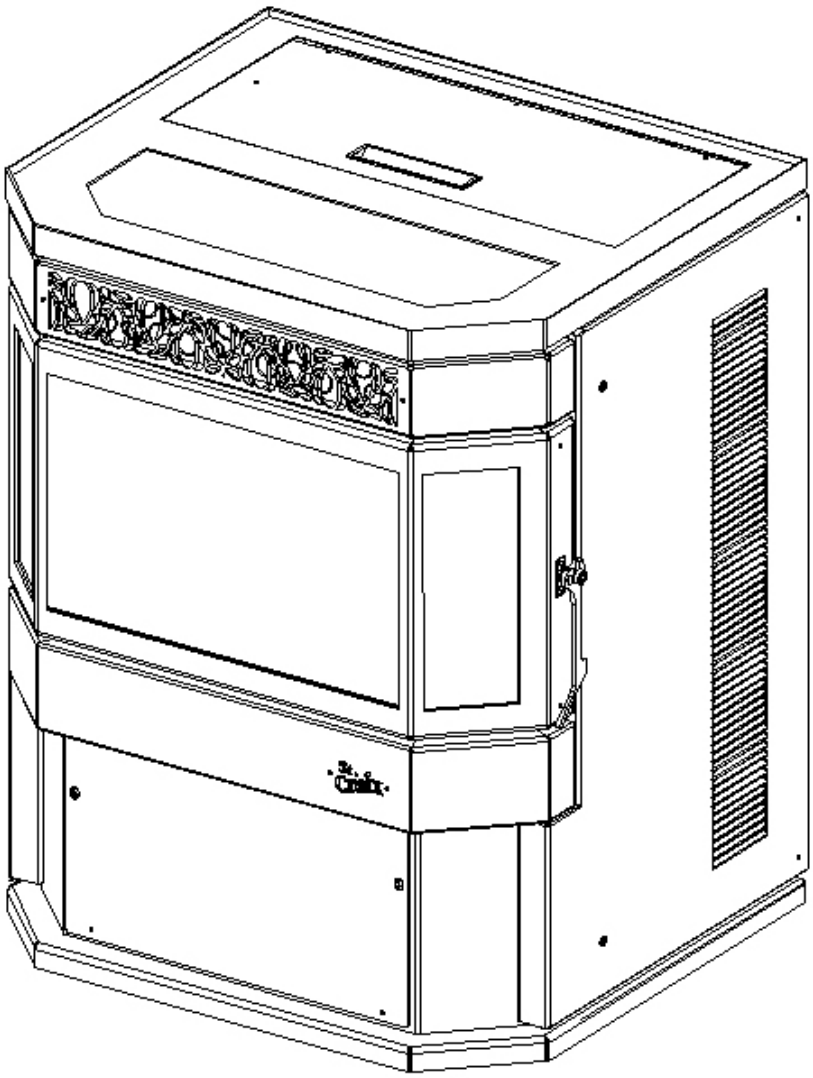

Figure 3

Caution

INSTALLATION IS TO BE PERFORMED BY A QUALIFIED INSTALLER OR DEALER.

ADHERE TO ALL CLEARANCES SPECIFIED BY THE MANUFACTURER OF THE VENTING SYSTEM USED.

ADHERE TO ALL CLEARANCES SPECIFIED IN THE INSTALLATION INSTRUCTIONS OF THIS STOVE.

THIS STOVE USES A POSITIVE PRESSURE VENTING SYSTEM. DO NOT INSTALL A FLUE DAMPER IN THE EXHAUST SYSTEM OF UNIT

DO NOT CONNECT THIS STOVE TO A CHIMNEY SYSTEM THAT IS CONNECTED TO ANOTHER APPLIANCE.

DO NOT INSTALL THIS UNIT IN A SLEEPING ROOM

ATTENTION

CONDENSATION: When planning the installation of your Stove, keep in mind that condensation is detrimental to exhaust systems. Corn, Wheat, Rye & Distiller's Grain have a higher moisture content than pellets and can be more susceptible to condensation forming in certain types of installations. Install the Stove with a minimum of the system exposed to the cold temperatures outside the envelope of the house. Check with the manufacturer of your venting system that they honor the warranty of their PL Vent with the use of corn.

ATTENTION

BATTERY BACKUP: Battery backup system are useful if the Stove is installed using horizontal venting only. This prevents any smoke from entering your home in the event of a power failure.

VENTING: APPROVED MATERIALS

The Stove requires a venting system approved for pellets by a certified testing lab. Approved pellet Stove venting materials are: 1) PL vent, a double wall vent with a stainless steel liner; and 2) Single wall rigid or flexible stainless steel pipe. PL Vent and Single wall vent is available through manufacturers such as (but not limited to): ICC Chimney, Energy Vent LTD, James A. Ryder, Simpson DuraVent and Selkirk Metalbestos and is carried by many local pellet Stove dealers. In this manual approved venting will be referred to a "PL vent" or "Single wall vent". All single wall vent adaptors must be stainless steel.

NOTE: TYPE "B" GAS VENT MUST NOT BE USED IN THE INSTALLATION OF THIS STOVE

Examples of venting system components follow:

High temperature ceramic roping reduces potential fly ash escaping through joints.

Stainless steel inner liners resist corrosive flue gas damage to the system.

Flex pipe should be stainless steel, 4 ply construction with a total thickness of approx. .07 inches.

TYPICAL PL VENT COMPONENTS

RAIN CAP VERTICAL OR HORIZONTAL

WALL THIMBLE

CHIMNEY ADAPTER

SUPPORT BRACKET

ADJUSTABLE LENGTH *PIPE*

SINGLE TEE *w/TEE CAP*

SINGLE REDUCTION *TEE w/TEE CAP*

DOUBLE TEE *w/TEE CAP*

PIPE ADAPTER

INCREASER

45^0 ELBOW

90^0 ELBOW

VENTING: DETERMINING MATERIALS

TYPE OF MATERIALS:

1. PL Vent must be used.

2. **Exception: Single wall stainless steel may be used inside an existing chimney.** (No clearances to combustibles are needed on single wall stainless steel adaptors, rigid or flex pipe installed within a chimney.)

3. A clean-out "tee" (PL Vent or "Quick-Connect Exhaust") must be installed directly to the Stove and at the bottom of each vertical run of the exhaust system. These tees are to assist in periodically cleaning the pipe. Single or double clean-out tees may be used. **The exhaust system must be installed so the entire system can be cleaned without disassembly.**

NOTE: ADHERE TO THE PL VENT CLEARANCES TO COMBUSTIBLES AS REQUIRED. STRICTLY OBSERVE THE PL VENT MANUFACTURER'S SAFETY SPECIFICATIONS.

QUANTITY OF MATERIALS:

1. It is recommended that the vent system be installed with a **minimum of three feet (3') of vertical rise** above the exhaust port on the back of the Stove.

FAILURE TO PROVIDE THE NATURAL DRAFT THAT RESULTS FROM A VERTICAL RISE MAY RESULT IN SMOKE BEING RELEASED INTO THE HOUSE WHEN ELECTRICITY TO THE UNIT IS INTERRUPTED WHILE BURNING OR SMOLDERING PELLETS OR CORN REMAINS IN THE BURN GRATE. (*See "Battery Backup" on page 13)*

2. It is not recommended to run vertical venting outside the heated environment where the Stove is installed. Running a venting system in a cold environment may cause the flue temperatures to cool down too much for adequate drafting.

Additional vertical exhaust venting should be provided when using:

a. More than one (1) elbow or tee; and/or

b. Horizontal runs of over three (3) feet. *(Horizontal runs over 10 feet not recommended)*

3. For a venting system ending in a horizontal run, the exhaust pipe must be terminated by a listed end cap or a PL vent elbow (45 or 90 degrees). Note: End caps or elbows must vent exhaust gases away from the building.

4. For termination above the building roofline a rain cap is required.

5. The exhaust pipe on the Lincoln SCR is 4" O.D. to accommodate a pipe adaptor.

VENTING: TERMINATION REQUIREMENTS

In determining optimum vent termination, carefully evaluate external conditions especially when venting directly through a wall. Since you must deal with odors, gases, and fly ash, consider aesthetics, prevailing winds, distances from air inlets and combustibles, location of adjacent structures and any code requirements.

1. Exhaust must terminate above combustion air inlet elevation.
2. Do not terminate vent in any enclosed or semi-enclosed area, (i.e. carports, garage, attic crawl space, etc.) or any location that can build up a concentration of fumes.
3. Vent surfaces can get hot enough to cause burns if touched by children. Non-combustible shielding or guards may be required

The type of installation must first be considered before determining the exact location of the venting termination in relationship to doors, window, cavities or air vents. See figures 4a and 4b below.

a. **Without** Outside Air connected to the unit. For These types of installations please refer to the dimensions listed below in figure 4a.

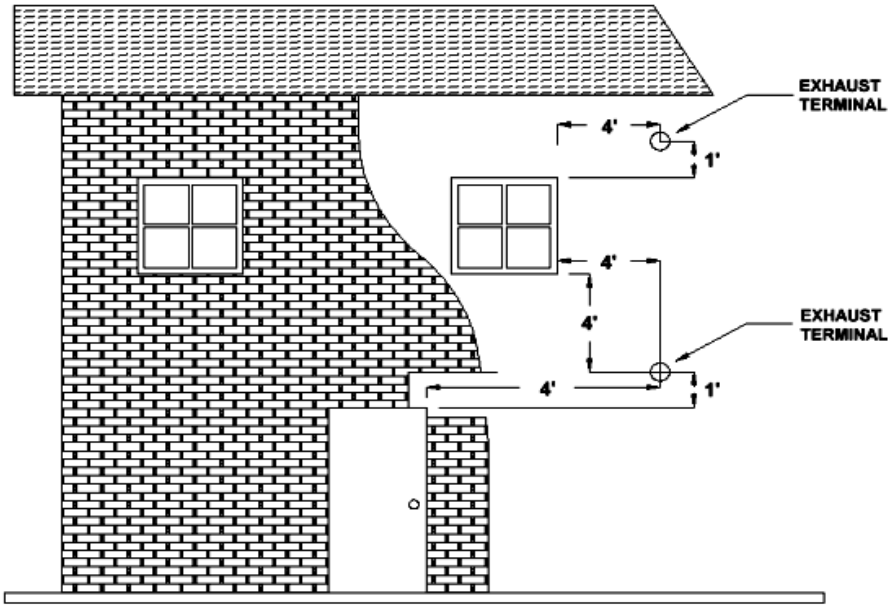

Figure 4a

4' (1.2 m) BELOW	a door, window, cavity, or air vent
Or	
4' (1.2 m) HORIZONTALLY FROM	a door, window, cavity, or air vent
Or	
1' (305 mm) ABOVE	a door, window, cavity, or air vent

b. **With** Outside Air Connected to the unit. In this manner the appliance is a Direct Vent Appliance (sealed Combustion System) as listed in NFPA 211-6.

3.3.3.2 Direct Vent Appliance (Sealed Combustion System Appliance) A system consisting of an appliance, combustion air and flue gas connections between the appliance and the outside atmosphere, and a vent cap supplied by the manufacturer, and constructed so that all the air for combustion is obtained from the outside atmosphere and all flue gases are discharged to the outside atmosphere.

Special Venting Arrangements are listed in NFPA 211-31

10.7.1.2 The Vent Terminal of a Direct Vent Appliance with an input of 10000 BTU/Hr or less shall be located at least 6" from any opening into a building, and such an appliance with an input of over 10000 BTU/Hr, but not over 50000 BTU/Hr shall not be located less than 9" from any opening through which vent gases could enter a building, and the vent terminal of such appliance with an input over 50000 BTU/Hr shall be located not less than 12" from the opening.

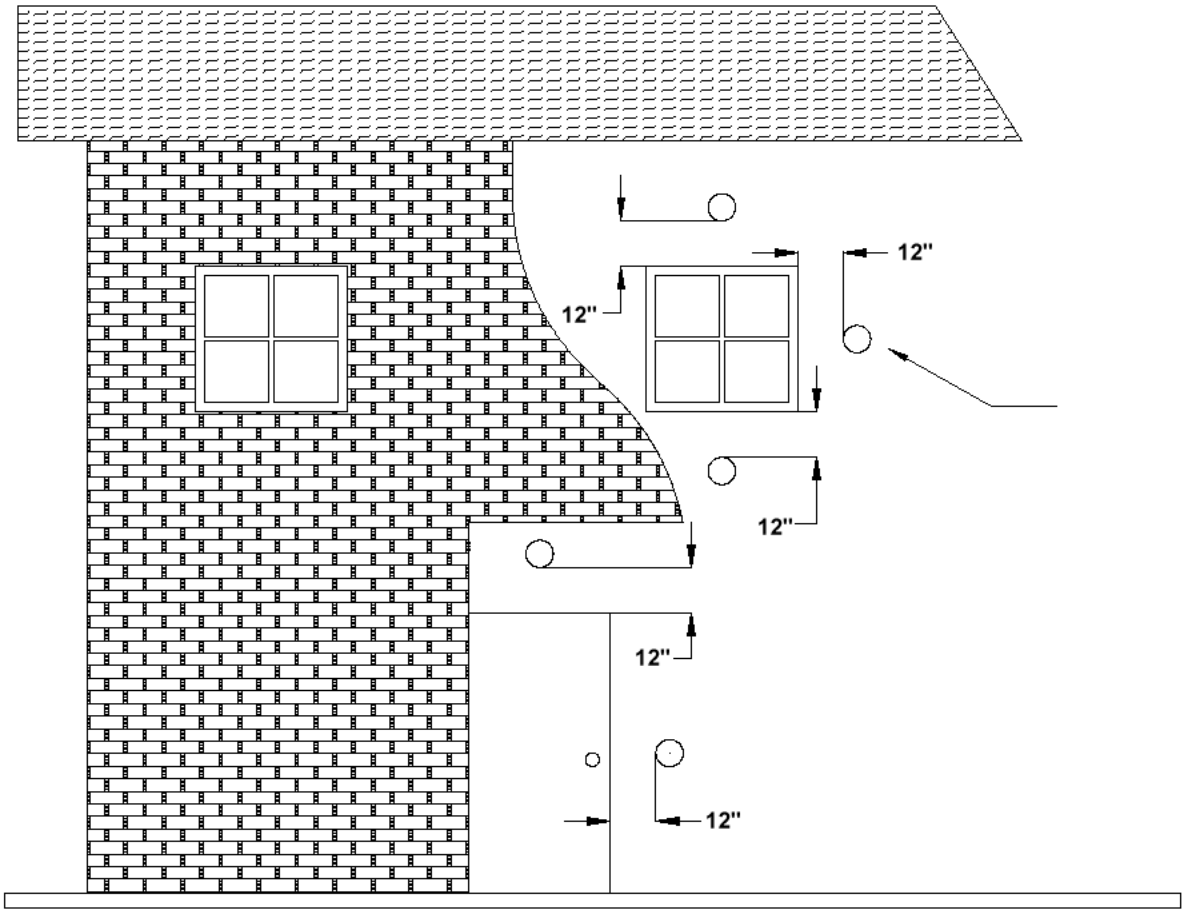

Figure 4b

1' (305 mm) ABOVE, BELOW OR HORIZONTALLY FROM a door, window, cavity, or air vent.

VENTING: TERMINATION CLEARANCE REQUIREMENTS

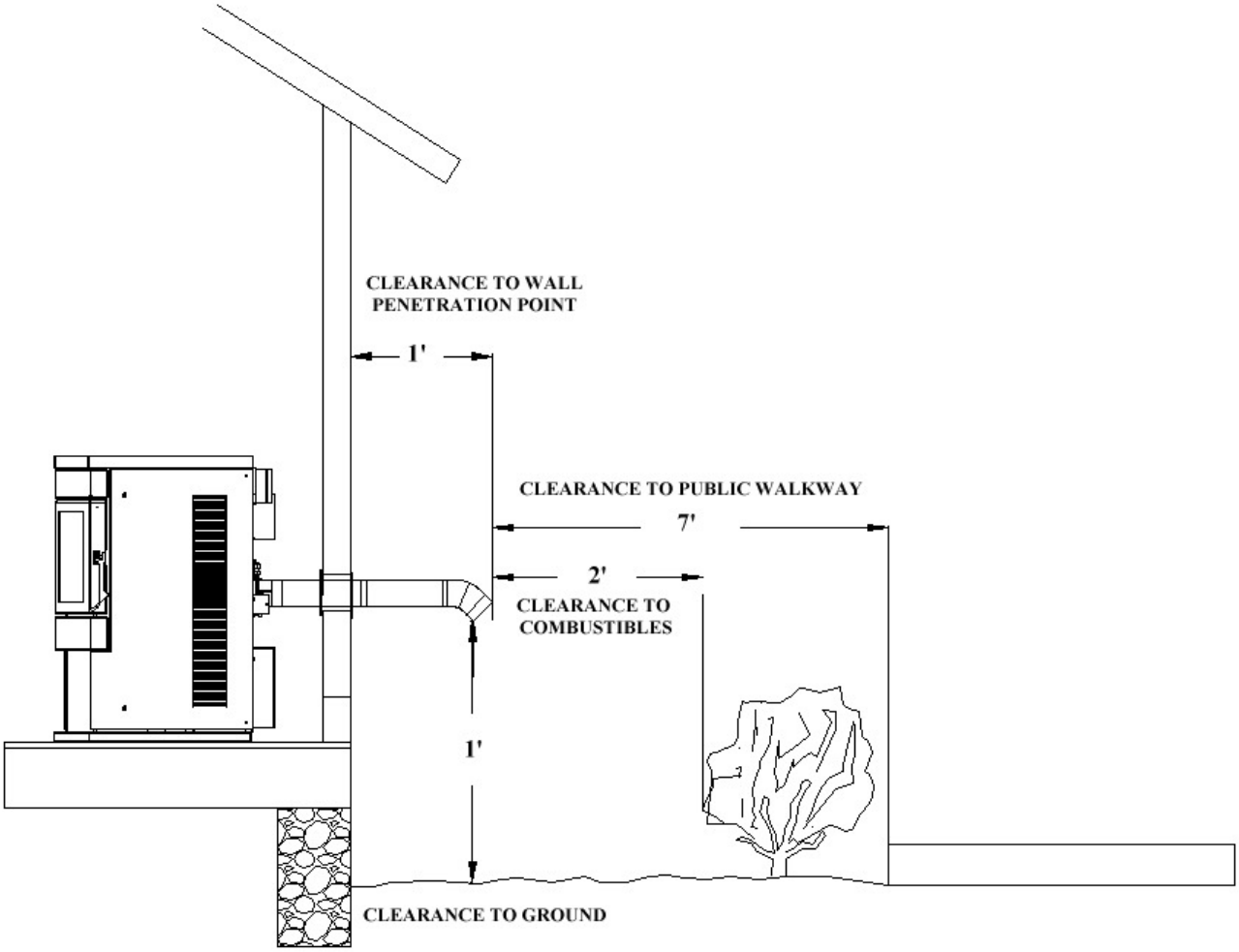

Figure 5

THE EXHAUST TERMINATION LOCATION MUST BE AT LEAST

1’ (305 mm)	ABOVE the ground level
7’ (2.1 m)	FROM a public walkway
1’ (305 mm)	FROM The wall penetration point
3’ (915mm)	FROM a gas meter/regulator assembly
2’ (610 mm)	FROM any adjacent combustibles such as: Adjacent buildings, fences, protruding parts of the structure, roof eaves or overhangs, plants, shrubs, etc.

VENTING: INTO AN EXISTING CHIMNEY

The stove may be connected to an existing Class A chimney or a masonry chimney which meets the minimum requirements of NFPA 211.

1. If the stove's exhaust is connected to a masonry chimney, the masonry chimney must be free of cracks that could leak exhaust gases or fly ash. A relining of the chimney with either PL vent or single wall stainless steel pipe may be necessary to bring the chimney into compliance.
2. When chimneys are relined, a chimney chase cap that reduces the outlet of the chimney to the size of the liner is required. Extend the exhaust vent above the chimney chase cap and finish it off with a rain cap. **A single wall liner may need to be insulated to maintain adequate exhaust temperatures in the vent system**

Note: Outside Chimneys frequently are difficult to keep warm, if in doubt insulate the liner.

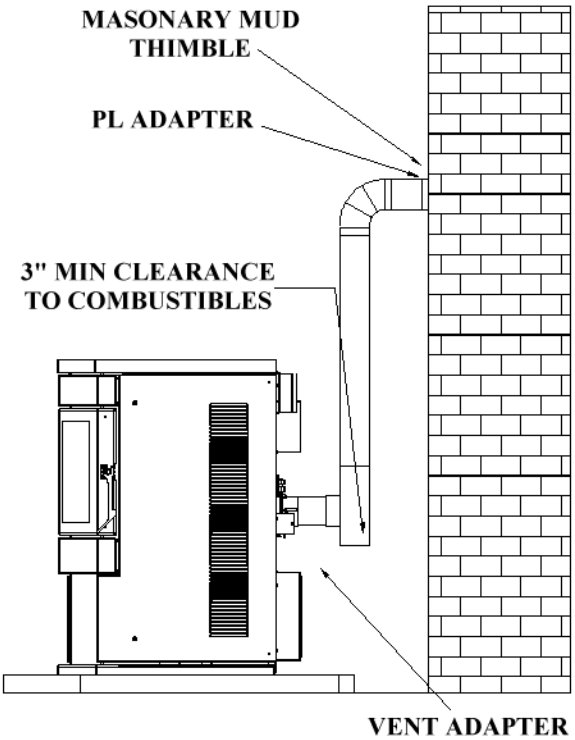

Figure 6
Venting into Masonry Chimney

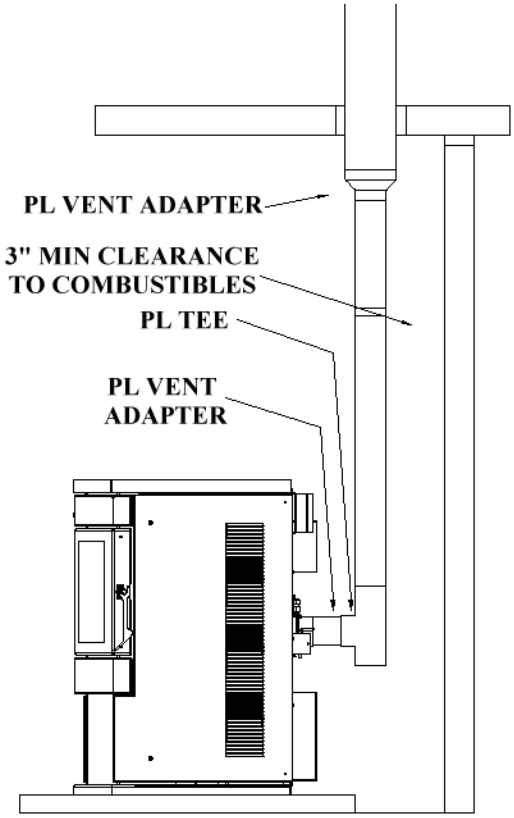

Figure 7
Venting into Class A Chimney

3. Venting into the side of an existing masonry chimney must be done through a masonry thimble. When wall penetration is necessary to access a masonry chimney, use a listed PL vent wall thimble. (Figure 6).

4. When venting into a Class A steel chimney, (Figure 7), use an appropriate PL Vent adapter.

Hearth Mount

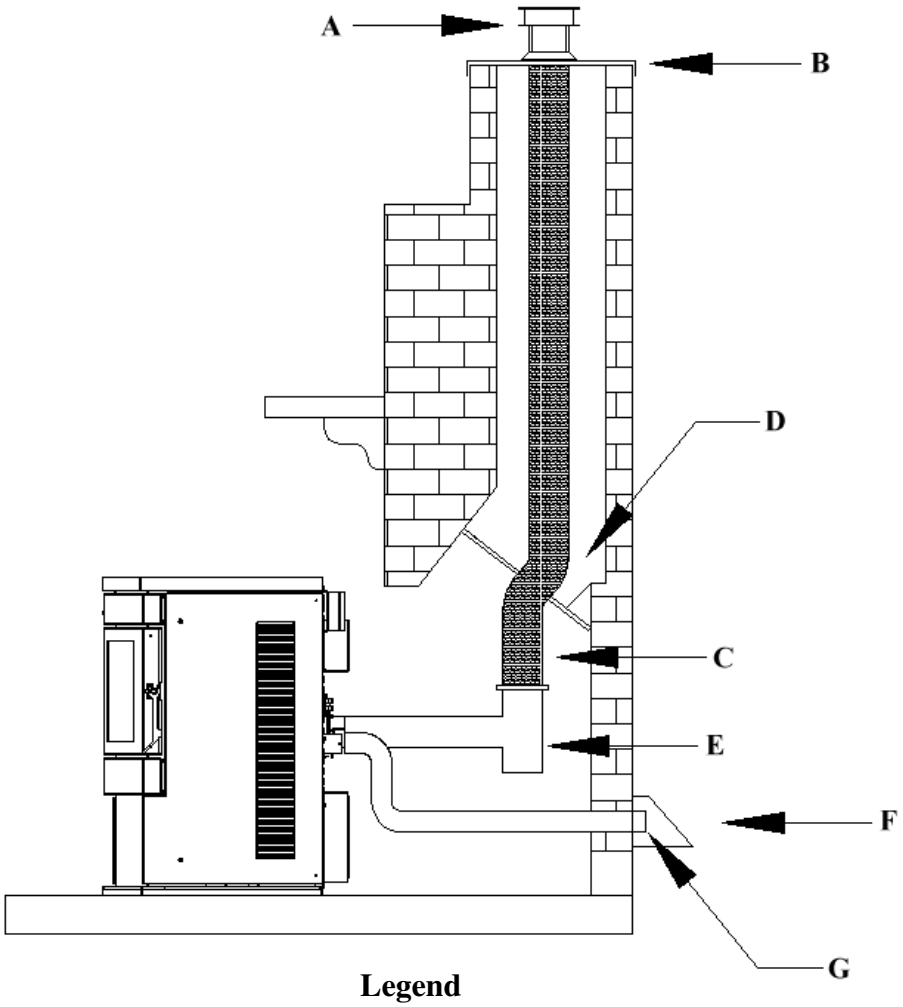

Legend

A – Vertical Cap
B – Chimney Flashing
C – Stainless Steel Liner / PL Vent System
D – Positive Block Off Plate
E – PL Tee or Single Wall Tee
F – Outside Air Shield – May be needed
G – 2” Metal Outside Air Pipe - Optional

Figure 8. Venting to the Top of Chimney

When installing as a hearth mount stove into a fireplace the unit must either be relined, terminating above the chimney chase top, or positively connected to the existing chimney system using a block off plate (D). An approved flex liner of PL vent must be used. **A chimney system with known drafting problems may require a liner, which may also need to be insulated to keep vent system warm in a cold chimney environment.**

FLOOR PROTECTION

The stove must be installed on a non-combustible protective pad

Hearth models may be placed directly on the noncombustible hearth of a fireplace.

The Hearth must extend a minimum of 6” (152 mm) in Front of Unit *and* beyond each side of the Fuel Loading and Ash Removal Opening(s).

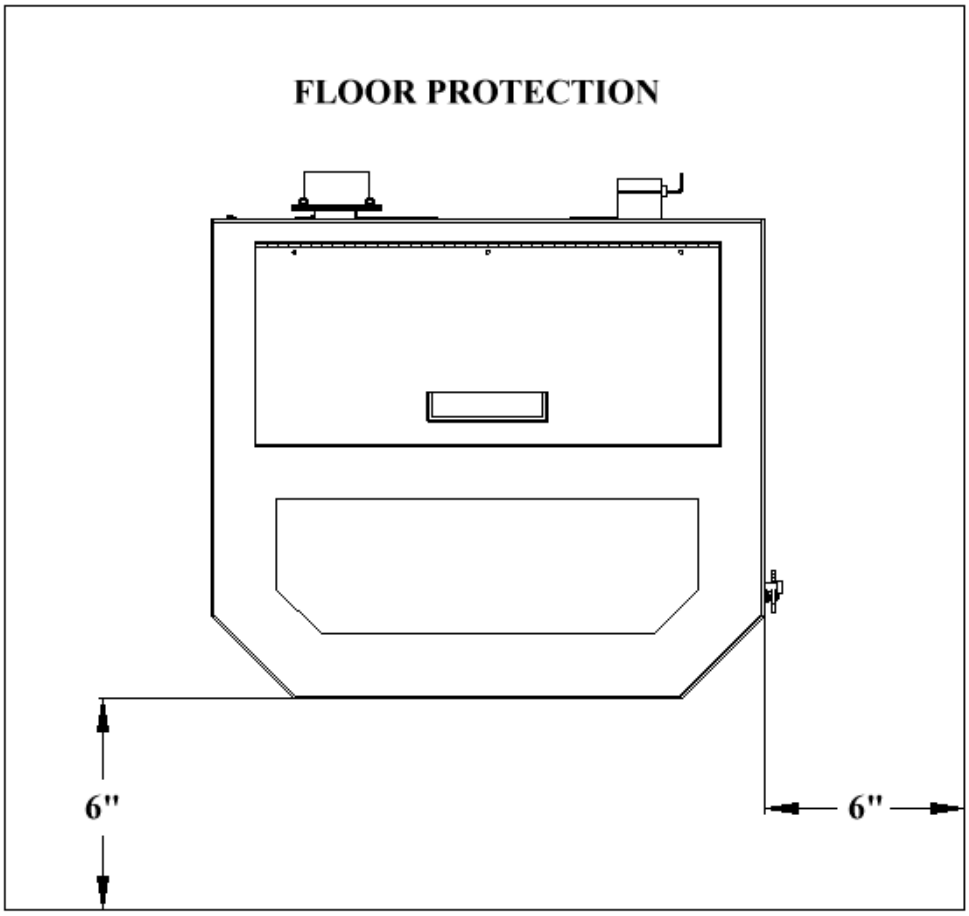

Figure 9
Floor protection (Top View)

MINIMUM CLEARANCES (INCHES) TO COMBUSTIBLE MATERIAL

Figure(s):	From:	
11	Sides of stove	6”
11	Back of stove	4”
10	Corner of stove	4”
6, 7	Vent pipe	3”
12	Stove to mantel	12”
9, 12	Floor protection: Front (from faceplate)	6”
9	Floor protection: Sides	6”
13	Alcove: Vertical to Combustibles	16”
14	Alcove: Sides	6”
14	Alcove: Back	4”

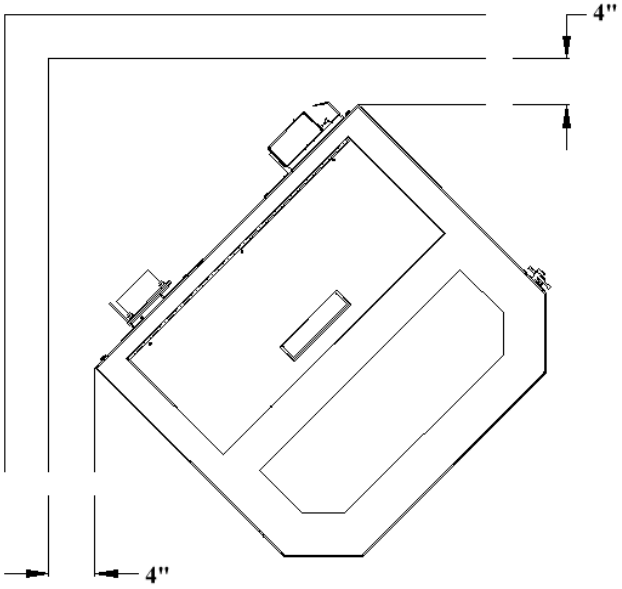

Figure 10 (Top View)
Clearances: corners of stove

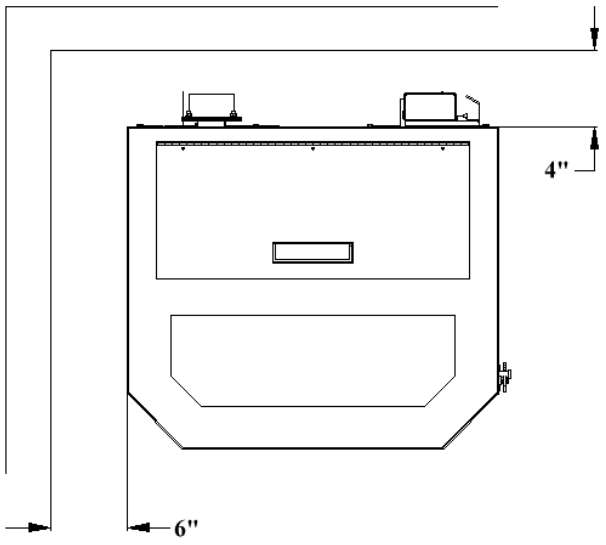

Figure 11 (Top View)
Clearances Sides and Back

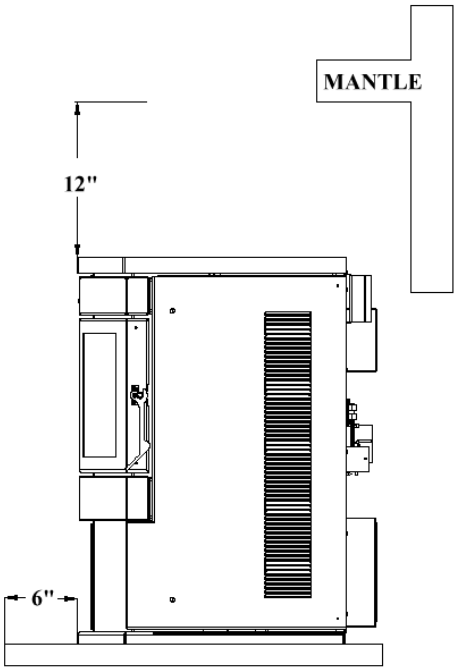

Floor Pad and Mantle Clearances
Figure 12

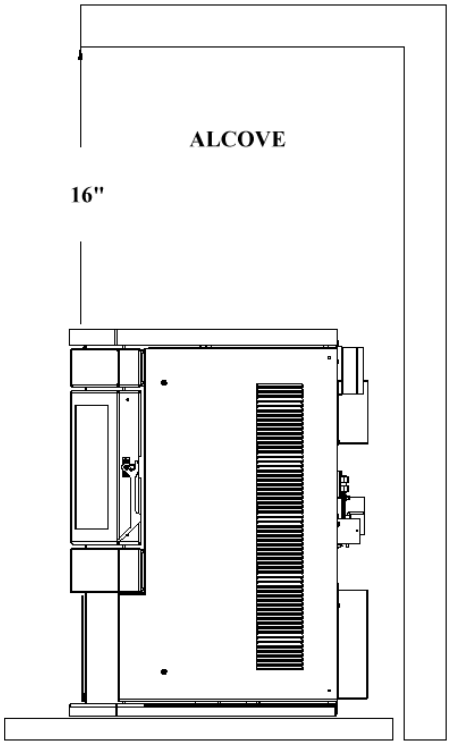

Alcove Installation (Side View)
Figure 13

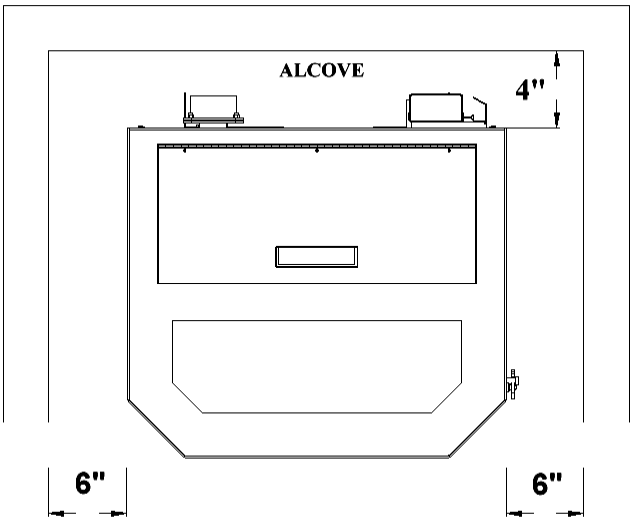

Figure 14
Alcove Installation (Top View)

Although 6“ is the minimum clearance to the sides of the stove, this is not recommended due to the need for access into the inside of the stove for the maintenance, as spelled out in the Operations Manual. Please read the section covering Daily, Periodic and Yearly Maintenance in the Operations Manual.

OUTSIDE COMBUSTION AIR

1. Under certain conditions it is recommended that the Lincoln SCR be connected to an outside source of combustion air to improve performance. Flexible metal hose, or rigid metal pipe, (conduit), must be connected around (NOT INSIDE) the combustion air inlet tube. Be careful not to pinch or bend the outside air pipe with too small a radius which may be terminated flush with the outside wall but should be protected from wind and weather by a hood. Note: The outside air pipe must terminate above the maximum snow line.

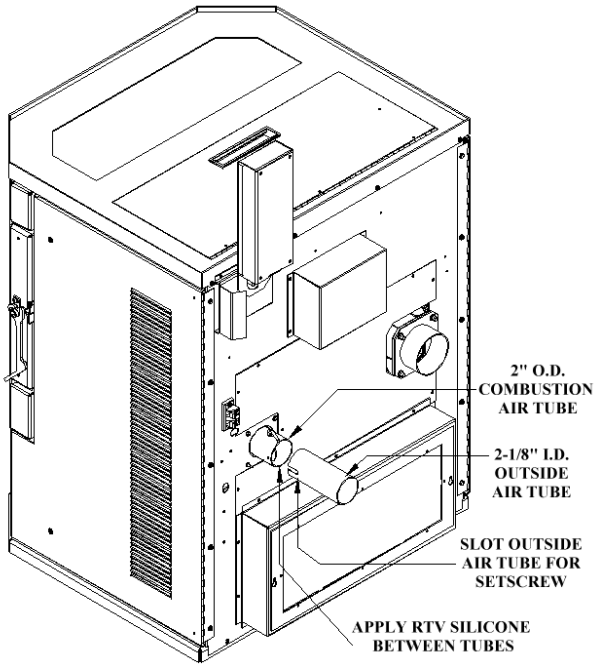

Figure 15

WARNING

USE THE AIR INTAKE DAMPER FOR ADJUSTING COMBUSTION INLET AIR ONLY! OTHER METHODS OF RESTRICTING OR BLOCKING COMBUSTION INLET AIR ARE STRICTLY PROHIBITED!

2. Outside air may be drawn from a semi-enclosed attic or crawl space or any semi-enclosed space. Take care not to draw cold air past water pipes that may freeze.

3. Increase the outside air pipe diameter to 3” for runs over ten (10) feet and elevation over 4,000 feet. Note: Long runs should be avoided.

4. Terminate the outside air pipe below the exhaust vent outlet.

5. An open mesh screen should be placed over the outside air pipe opening to prevent birds or rodents from nesting in the opening. Use an elbow or shield to prevent prevailing winds from blowing directly into the outside air intake pipe. NOTE: Mesh screen should be no smaller than one-fourth inch (1/4”) by one-fourth inch (1/4”).

WARNING: OUTSIDE COMBUSTION AIR IS REQUIRED FOR ALL MOBILE HOME INSTALLATIONS!

Mobile Home Installation

Unit must be installed in accordance with the:

Manufactured Home and Safety Standard (HUD), CFR 3280, Part 24

Unit may be installed in a Mobile Home, after the initial sale of the Mobile Home, not for Recreational Vehicles.

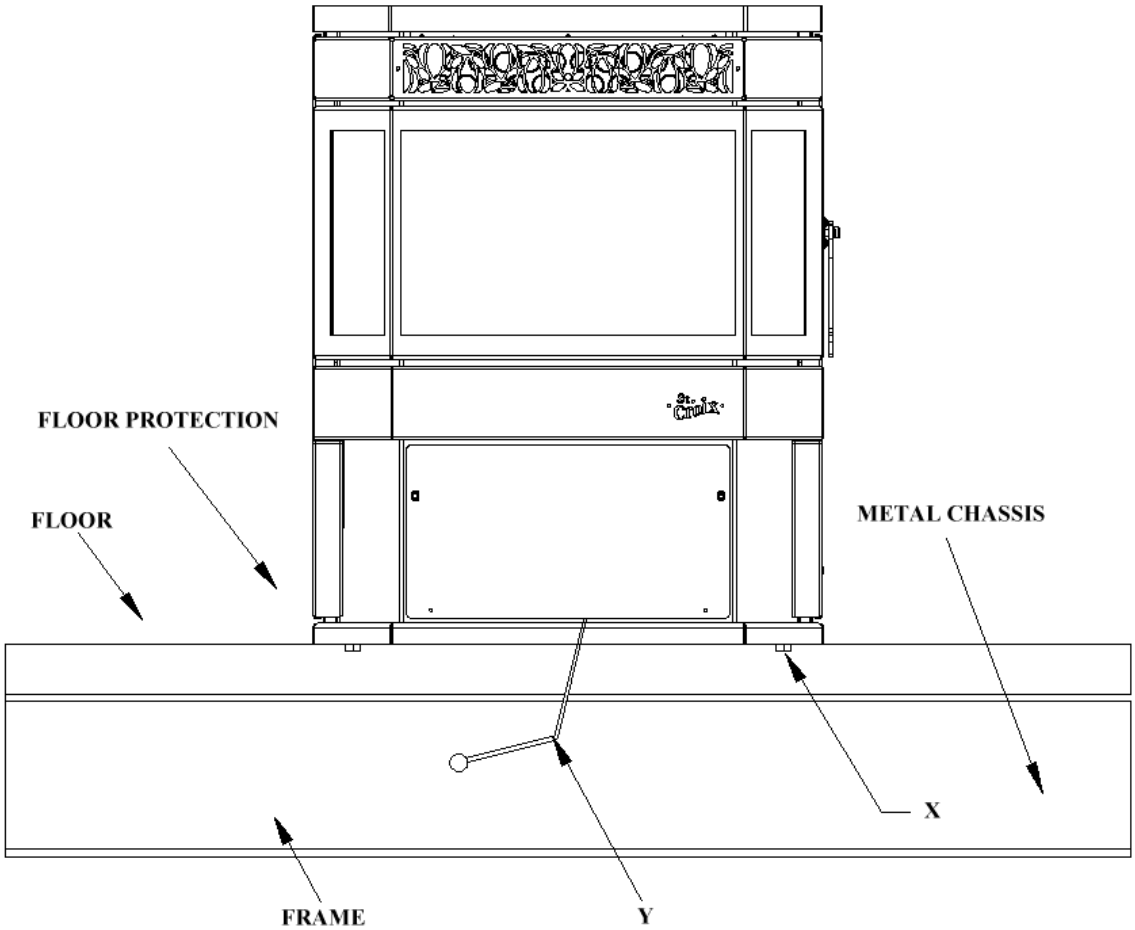

Figure 16

1. WARNING: DO NOT INSTALL IN A SLEEPING ROOM.

2. WARNING: COMBUSTION AIR MUST COME FROM THE OUTSIDE OF THE MOBILE HOME! FAILURE TO DO SO MAY CREATE NEGATIVE PRESSURE WITHIN THE MOBILE HOME AND COULD DISRUPT PROPER VENTING AND OPERATION OF THE PELLET STOVE.

3. CAUTION: THE STRUCTURAL INTEGRITY OF THE FLOORS, WALLS, CEILING AND ROOF MUST BE MAINTAINED.

4. Permanently bolt the stove to the floor, (X).

5. Electrically ground the stove and pedestal to the metal chassis of the home. Use a number eight, (8) gauge or larger copper wire, (Y).

6. Maintain an effective vapor barrier at location where PL vent exits the structure.

7. Check any other local building codes or other codes that may apply.

8. Do not use components other than those specified for use with this unit.

9. Floor protection requirement must be followed precisely.

10. PL Vent must be used for exhaust venting. (Single wall vent is not allowed). Follow PL Vent manufacturer's installation directions and observe all listed clearances to combustibles.

USE OF A THERMOSTAT

St. Croix Pellet stoves offer our customers the optional feature of thermostatically controlling your new stove. By using a thermostat to control the operation of your Stove, you can benefit two ways. First of all, after setting the thermostat to your desired heating needs the stove will operate accordingly to uniformly maintain your desired temperature setting. Secondly, the fuel consumption is being optimized, which ultimately results in lowering your seasonal heating costs.

While the room temperature remains cooler than your desired thermostat setting, the stove will operate at any of the 5 HEAT ADJUST selector positions. Read the Operations manual to determine which Thermostat Mode you want to use. You can choose between the T-Stat Mode and the SmartStat Mode. ***We recommend using the Fully Automatic "SmartStat" Mode.***

1. Once you have successfully lit your stove, set the thermostat to your desired heating needs.

2. Set the HEAT ADJUST selector to a position that will effectively create a rise in room temperature above your thermostat setting. The recommended heat adjust settings while using a thermostat are any position between 2 through 5.

Thermostat Hook-up

To hook up a thermostat, connect the wires from the thermostat to the external wire terminal on the back of the stove (see figure 17).

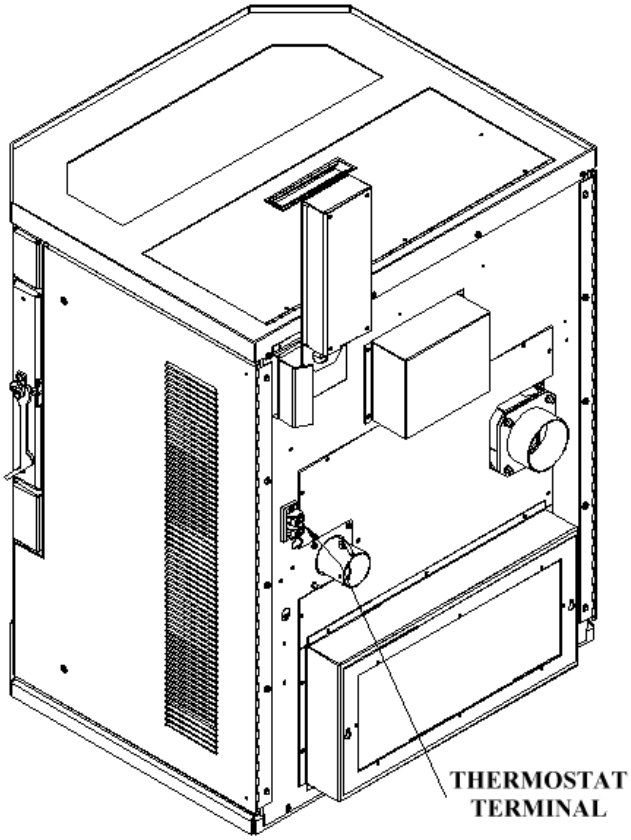

Figure 17

The external Thermostat wire terminal has been pre-wired to the thermostat wire Terminal on the back of the control board (See figure 18)

Read the Frequently Asked Questions section in the Operations Manual to Troubleshoot the Thermostat.

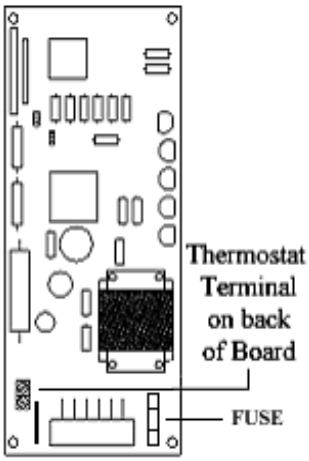

Figure 18

NOTE: Installers must determine a neutral location of where to mount the thermostat panel for accurate room temperature measurements.

LINCOLN SCR OPERATION

CAUTION: Operate this unit only with the fuel hopper lid closed. Failure to do so may result in emission of products of combustion from the hopper under certain conditions. Maintain hopper seal in good condition. Hopper lid switch will prevent the auger from running if lid is left open.

This unit requires 120-volt AC power to operate. In the event of a power failure the unit will shut down. **DO NOT ATTEMPT TO RUN THE UNIT DURING A POWER FAILURE.**

INSTALLATION CHECK

Proper installation is essential for safety, effective Operation, Warranty Coverage, Insurance requirements and to meet Local Building Codes. Installation Requirements are described in the first section of this manual. Verify the installation is correct before firing up the Stove for the first time.

When burning Corn, Wheat, Rye or Distiller's Grain, care should be taken in how the venting system is installed. To burn these fuels the moisture content should be 15% or less. This is much higher than the moisture content of wood pellets and can result in condensation forming in the venting system in certain installations. The chimney system should stay within the warm envelope of the house as much as possible. Only penetrate the exterior of the home where the exhaust system will terminate.

REMEMBER: Condensation from a corn Stove is detrimental to the venting system. Only buy venting systems that are warranted with burning corn.

PREVENTING CHIMNEY FIRES

Chimney fires can be prevented by properly operating the Stove and by periodic inspection and cleaning of the chimney. When wood is burned it produces tar and other organic vapors, which combine with expelled moisture to form creosote. The creosote vapors condense in the relatively cool chimney flue associated with a slow burning fire. As a result, creosote residue accumulates on the flue lining. When ignited this creosote can result in an extremely hot chimney fire.

The chimney and chimney connector should be inspected at least once every two months during the heating season to determine if a creosote build-up has occurred. If a significant layer of creosote has accumulated (3 mm or more) it should be removed to reduce the risk of a chimney fire. Use of an appropriately sized chimney brush or the services of a professional chimney sweep are recommended.

The chimney and chimney connector should be inspected at least once every two months during the heating season to prevent the system from getting plugged with fly ash. Clean the exhaust system if needed. Use of an appropriately sized chimney brush or the services of a professional chimney sweep are recommended.

APPROVED FUELS-Pellets, Corn, Wheat, Rye, Cherry Pits & Distiller's Grain only

PELLETS & CHERRY PITS

Clinkers and Ash are by-products of pellet & cherry pit combustion and are not caused solely by your Stove. Stove performance can be quickly and severely reduced if poor quality fuel is used. **Contact your dealer for more information on APFI approved wood pellet fuels. No standard exists for cherry pits.**

NOTE: Pellets with excessive sawdust should be screened by sifting with a 1/4" mesh screen.

Store Pellets under cover on a wooden pallet or other methods to ensure they do not become rain soaked or absorb moisture from damp or wet floors. Do not store pellets within Stove installation clearances or within the space required for ash removal.

CORN, WHEAT, RYE, DISTILLER'S GRAIN

These grains must have a 15% or less moisture content. The keys to satisfactory performance are: proper operation of the stove, diligent maintenance and burning only dry, clean, quality corn, wheat, rye & Distiller's Grain.

NOTE: Corn, Wheat, Rye & Distiller's Grain with excessive grain dust must be screened, by sifting with the appropriate size mesh screening. Large pieces of cob may plug the auger. ***No Standards exists for these fuels. Inspect fuel before buying.***

Store grain in a tight container or use other methods to ensure it does not become rain soaked or absorb moisture from damp or wet floors. This will also prevent rodents from becoming a problem. Do not store corn within Stove installation clearances or within the space required for clinker/ash removal. The Stove is not warranted against damage caused by poor quality grains, incorrect operation, poor maintenance or incorrect installation.

The Revolution Burn System was specifically developed to burn most grades of pellets and many other biomass fuels, such as Corn, Wheat, Rye & Distillers Grain pellets. When burning these fuels the Revolution pot is designed to cut the clinkers that form in the rotating drum. More and more pellets are also being produced with higher ash content than is allowed in a Premium Pellet. This requires a design that is capable of handling the ash produced in lower grade fuels. The Revolution Burnpot consists of a rotating drum that is divided into 4 sections. The drum is rotated on timed intervals to empty ash and keeps the pot burning at optimum efficiency. This eliminates the need to frequently shut the unit down for maintenance. Read the section covering Daily, Periodic and Yearly Maintenance for proper Maintenance Schedules.

The Stove is not warranted against damage caused by using poor pellets or other fuels not approved for use in this Stove, incorrect operation, improper maintenance, or incorrect installation.

The Revolution Burn System

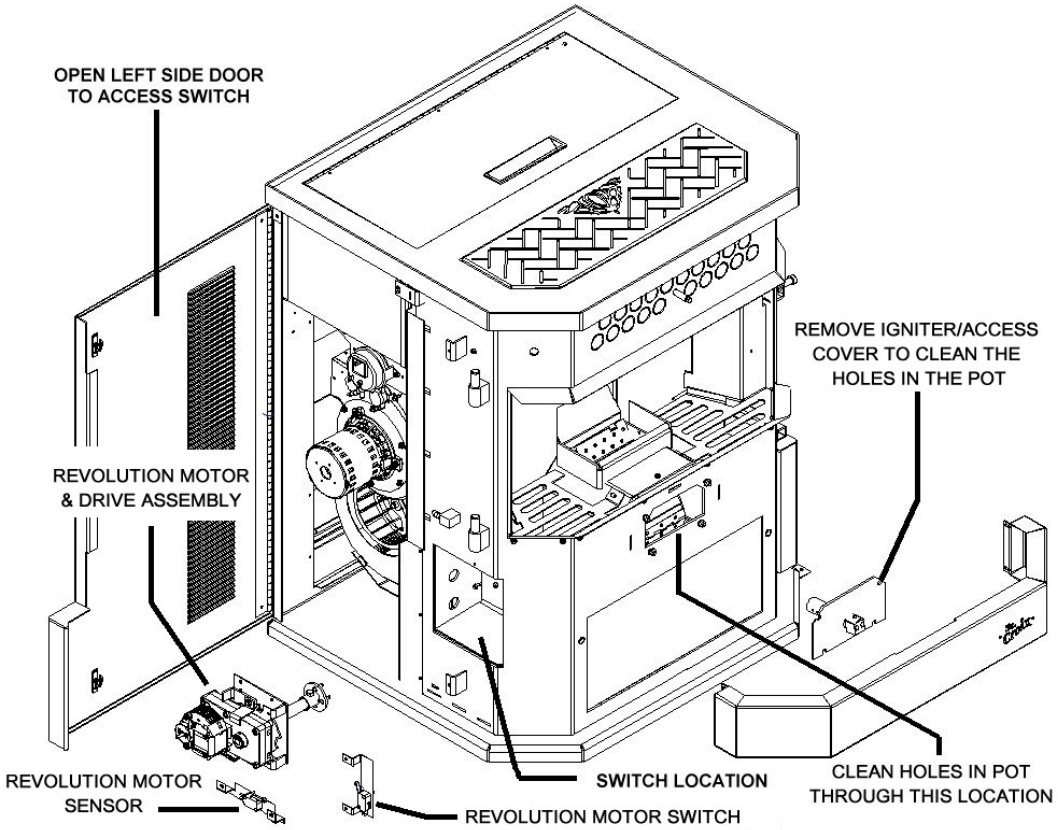

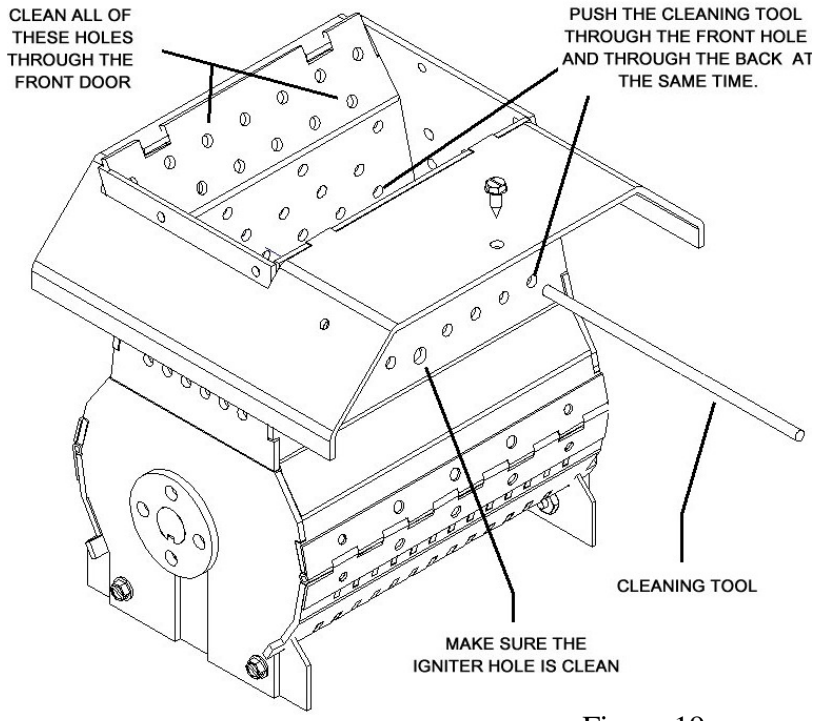

Figure 19

Pot Clean-Out Access Cover

There is a cover in the front of the furnace that gives access to cleaning the holes in the front and back of the Revolution burn pot. The holes should be checked periodically to keep the unit burning properly. For proper Ignition the hole in the front of the pot for the Igniter needs to be kept open. If a change is noticed in how the Furnace Ignites, shut the unit down and clean the hole. See Figure to the left for more information.

To clean the holes in the burnpot use a 3/16" diameter rod or a long Phillips Screw Driver (should be a minimum of 12" long to reach the holes on the back side of the pot).

To clean the holes in the front side and the back side at the same time, simply insert the cleaning tool through one of the front holes and push it all the way through and clean the hole that lines up behind it at the same time. (See Figure 13 on the previous page.)

Revolution Multi-Fuel Pot - Removal

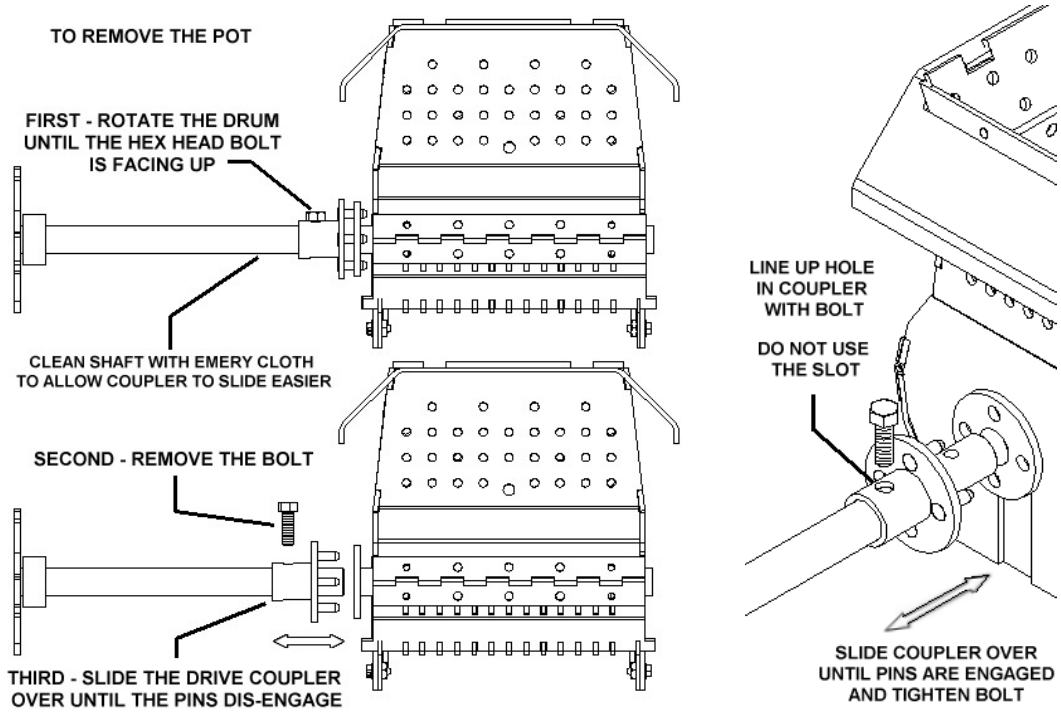

Figure 20

1 – Trip the Revolution Motor Switch as shown in figure 19 until the Hex head bolt is facing up as shown in figure 20. Remove the bolt and slide the Drive Coupler over to disengage the pins from the drum. ***Polish the shaft with some emery cloth if any residue has built up on the shaft during use to allow the Drive Coupler to slide easier.***

2 – Remove the Igniter cover and Igniter. *(See figure 19)*

3 – Remove the Igniter cover and Igniter. *(See figure 19)*

4 – Remove the side shields. *(See figure 19)*

5 – Remove the screw that holds the burnpot in place and lift the burnpot up and out of the stove. *(See figure 19)*

6 – Reverse steps to re-install the Revolution pot. ***Caution: Pay close attention to how everything lines up before re-installing the Pot and Drive Coupler.***

Revolution Multi-Fuel Pot – Exploded View

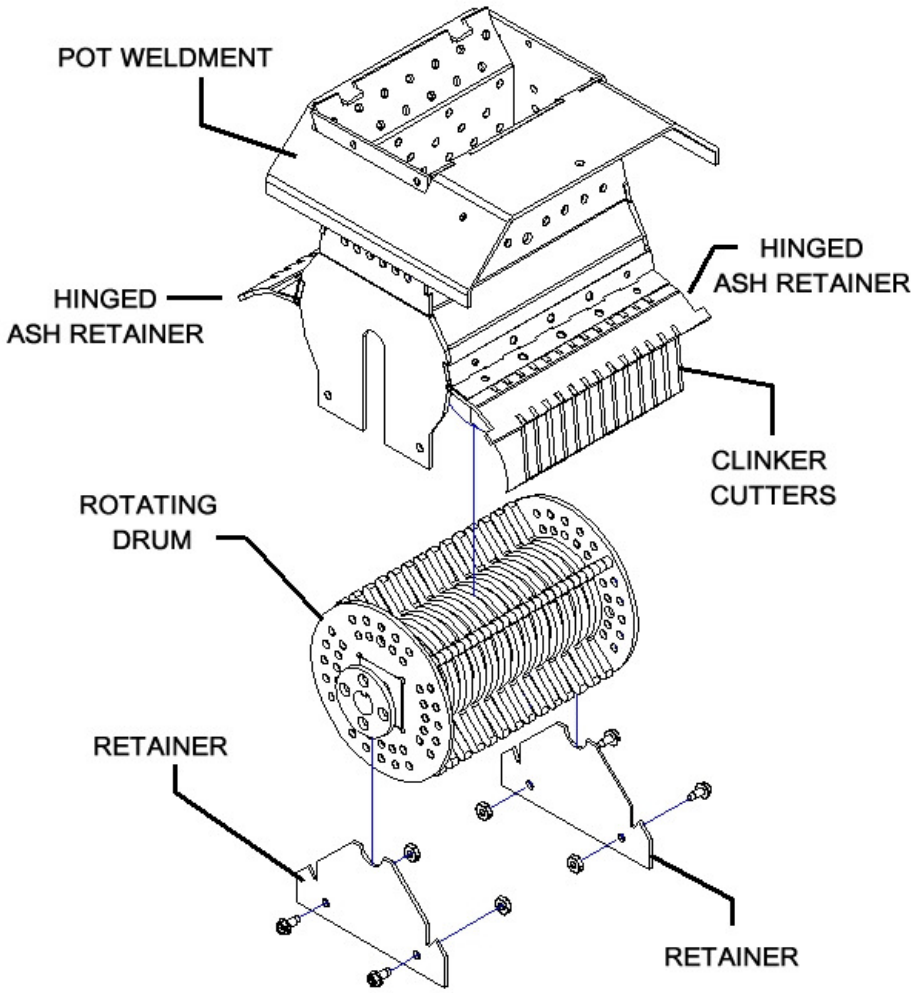

Figure 21

The main components of the Revolution Pot are:

a. The Pot Weldment
b. The Revolving Drum, which is the bottom of the burnpot.
c. The Clinker Cutters

To Disassemble the Pot assembly:

1. First remove the Retainers and open the hinged Ash Retainer on one side and the Clinker Cutters on the other.
2. The drum will now drop out the bottom of the Pot Assembly.

To re-assemble the Pot Assembly reverse the steps above. *(Be sure to place the drum with the drive coupling facing the Revolution gear motor)*

Self ignition

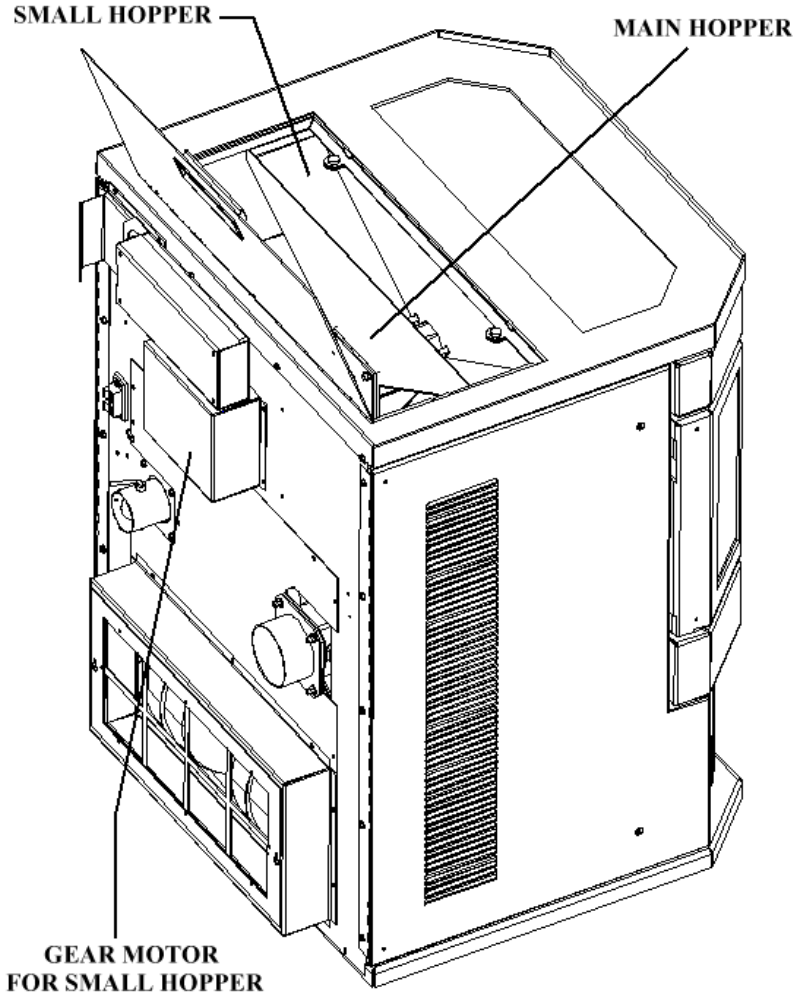

Figure 22

The Multi-Fuel Revolution pot used in the Lincoln SCR uses a Dual Hopper *(See Figure 22)*. The Dual Hopper feature is a Patent Pending Ignition System using pellets to ignite the Stove and automatically switch over to Corn, Wheat, Rye, Cherry Pits or Distiller's Grain after ignition has taken place. This allows the Stove to be fully automatic when running on a thermostat when burning other types of fuel. Figure 22 shows the small pellet hopper and gear motor used during the ignition process.

OPERATING INSTRUCTIONS

A different type of heater. The Lincoln SCR is a Stove. FOLLOW THESE OPERATING INSTRUCTIONS EXACTLY AS STATED TO ENSURE SAFE AND RELIABLE OPERATION.

1. Carefully read this "Operation and Maintenance" manual in its entirety BEFORE lighting your Stove for the first time.

2. Obtain final inspection and approval of installation from local building officials.

3. Have your dealer demonstrate all the operational and maintenance steps necessary for proper use of the Stove. **Sign and return the warranty card** to the address listed on the back page.

4. Some odors may be given off during the first few hours of burning during initial break-in. These odors are normal and not harmful. However, ventilating the room until the odors disappear is recommended.

5. The Stove will become HOT while in operation. Keep children, clothing and furniture away from all hot surfaces.

WARNING: **Direct contact with the Stove firebox during operation may cause skin burns.**

6. To avoid the possibility of smoke and/or sparks entering the room always keep firebox and ash pan doors closed whenever the Stove is operating.

7. A certain amount of carbon monoxide may be produced within the Stove as a by-product of combustion. All exhaust vent connections must be sealed with **RTV silicone** to assure a gas tight seal. **Any leaks into a confined area caused by faulty installation or improper operation of the Stove could produce dizziness, nausea and in extreme cases, death.**

8. Under certain circumstances an outside source of combustion air may be needed and is required on all mobile home installations. If room air is used to supply combustion air, room air starvation (not enough make-up air), operation of exhaust fans and icing of air vents can adversely affect proper Stove operation.

9. Smoke detectors, installed in the same general area as the Stove, may be activated if the Stove door is left open and smoke is allowed to enter the area.

CAUTION: NEVER ADD FIRE STARTER TO A HOT STOVE.

CAUTION - Hot Surfaces
- Keep Children away.
- Do not touch during Operation.

Control Board Features

The Control Board controls all functions of the Stove by monitoring sensors that are in the system. These sensors serve 2 purposes.

a. General Operation of the Stove.

b. Safety Features, to shut the unit down in the event the sensors detect a problem in the unit.

The Control Board also has Diagnostic Capabilities to help in diagnosing 3 areas in the Stove. These areas are:

1. High Temperature Limit.

2. Proof of Fire Sensor

3. Vacuum in the Firebox

A closer look at the Control Board to the right in figure 23 will explain how the board works. There are essentially 4 buttons on the control board. Two of these buttons, the **Heat Level** and **Draft Trim** Buttons, have a High/Low side to advance these settings up or down. There is a slide switch that controls the Thermostat Mode and an LED Light bar that indicates which of the 5 Heat Settings the Stove is running on.

The LED Light bar is also used during the Diagnostic process, see page 45 for more details.

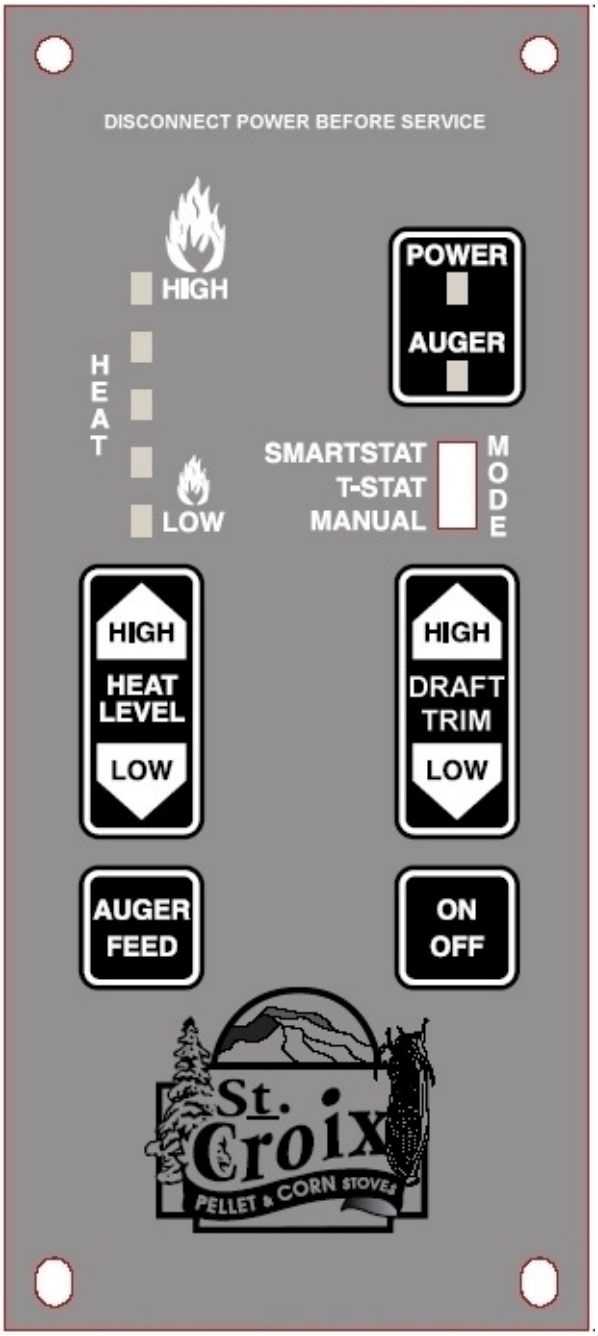

Figure 23

1. The Heat Level button will advance the setting up and down between level 1 and 5. It will also be used in the Fine Tuning process of the feed rates if needed. *(See point 4 b. below*)

2. The Auger Feed button will allow the user to manually auger fuel into the burn pot on start up when needed. This is particularly helpful in priming the Auger Tube when it is empty (After the hopper has run out of pellets). This button is also used to make small adjustments to the combustion air and the feed rates as part of the **Fine Tuning** process of the control board. *(See point 4 a. below*)

3. The On/Off button not only turns the Stove On and Off, ***it also resets the board if one of the sensors has detected a problem and the board is flashing a Diagnostic code***.

4. The Draft Trim button allows for adjusting the Exhaust (Combustion) fan voltages up or down providing for fine-tuning of the combustion air. The LED lights indicate the level of adjustment and the factory setting is the center LED light. This gives 2 adjustments up and 2 adjustments down. (See points 8 & 9 on page 61)

   a. To adjust the Combustion Fan voltages:

      Hold the Auger Feed button down and press the Draft Trim High/Low button and this will change the fan voltage approximately 2.5 volts up or down from the factory setting. Watch the LED lights to see the setting is on (it will flash the new setting). This new setting will stay in memory from this point on.

   b. To adjust the Feed-rates:

      Hold the Auger Feed Button down and press the Heat Level High/Low button and this will change the ON Time up or down .25 seconds from the factory setting. Watch the LED lights to see the setting is on (it will flash the new setting). This new setting will stay in memory from this point on.

5. The Thermostat Slide switch allows the Stove to be run in 3 different Modes:

   a. Manual Mode. The Control Board controls all functions of the Stove.

   b. T-Stat Mode. The Stove is hooked to a Thermostat and when calling for heat the Stove will advance to the Heat level set at the Control board. Once the Heat demand has been met the Stove will drop to the #1 Heat Level setting and pilot. The Stove never shuts off and provides constant heat. Stove must be turned ON/OFF at the control board.

   c. SmartStat Mode. The Stove is hooked to a Thermostat and when calling for heat the Stove will advance to the Heat level set at the Control board. Once the Heat demand has been met the Stove will drop to the #1 Heat Level setting and pilot for one hour. If the Thermostat does not call for heat during that hour the Stove shuts off and re-lights itself the next time the Thermostat calls for heat. This setting is the recommended setting if a thermostat is used. The stove is Fully-Automatic.

Pre-Lighting Instructions.

The Control Board has 4 separate programs. Each program is specific to certain fuels. Before lighting the Stove for the first time, be sure the correct program is chosen.

To change the program on the board, the Stove must be off and plugged in. The programs are identical in operation, except for the Cycle Time. The Cycle time is the total of the ON Time & OFF Time added together. The ON Times are constant, so this means that the OFF Time is increased or decreased, depending on the program chosen.

The programs break down as follows:

1 - **Program 1.** The Cycle Time is 7.5 seconds. This program will be the default program when the Stove is first plugged in. **This program is for use with Pellets & Cherry Pits.** ***(See figure 26 on page 39)***

2 - **Program 2.** The Cycle Time is 8.5 seconds. **This program is for use with Pellets, Corn, Wheat, Rye, Cherry Pits & Distillers Grain Pellets.** ***(See figure 26 on page 39)***

3 - **Program 3.** The Cycle Time is 9.5 seconds. **This program is for use with Pellets, Corn, Wheat, Rye, Cherry Pits & Distillers Grain Pellets.** ***(See figure 26 on page 39)***

4 - **Program 4.** The Cycle Time is 10.5 seconds. **This program is for use with Pellets, Corn, Wheat, Rye, Cherry Pits & Distillers Grain Pellets.** ***(See figure 26 on page 39)***

As the Cycle Time increases, the BTU rate of the stove decreases. If the incorrect program is chosen for a specific fuel, the burnpot will overload and the Stove will loose its fire and go out. Another way to look at it is this: burning pellet using program 1 will have a Higher BTU rating than pellets burning on programs 2 through 4. The same is true for burning corn, using program 2 will have a higher BTU rating than corn burning on programs 3 and 4. Looking at the list above you see which fuels are approved for any specific program. Using any of the other programs will cause the burnpot to overload.

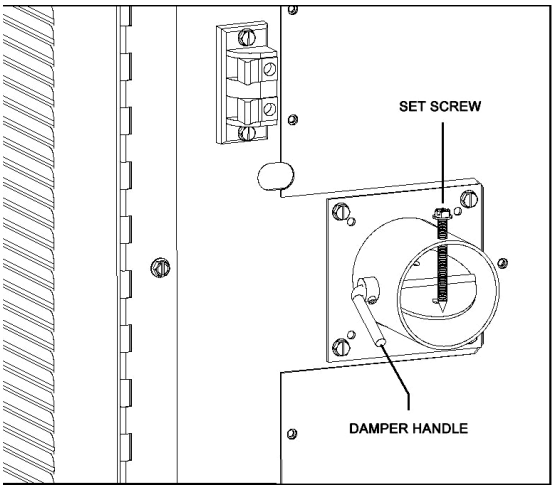

The damper must be adjusted for each specific fuel as well and should be set during the first fire.

To adjust the damper for other types of fuel, use the following procedures:

First turn the setscrew clockwise until it stops against the tube. See figure 24.

Figure 24

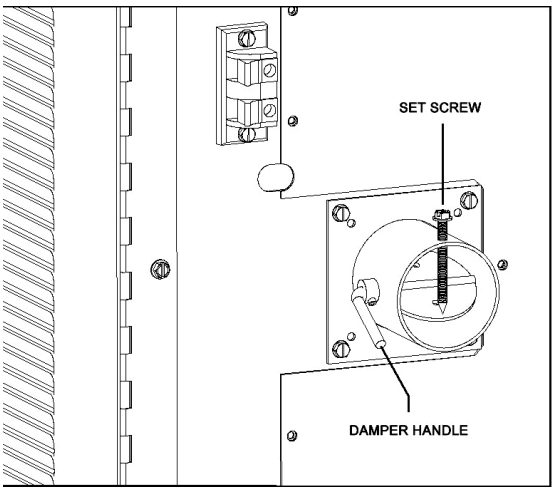

The factory setting is achieved by turning the screw in until it stops and then reversing the screw 5 **full** turns. **Remember to use the handle to place the damper against the screw**.

When switching between fuels it is best to return the Damper to the Factory Setting and then proceed to the setting listed below.

Remember: The Settings listed below are the starting point for final adjustments to the damper and are for reference only.

Figure 25

Damper setting for Pellets, Cherry Pits & Distiller's Grain - Use the Factory Setting as the beginning point for final Damper Adjustments.

Damper setting for Corn - Turn the Screw in 1.5 turns from the Factory Setting and make sure the damper blade rests against the setscrew. *(This is reversing the screw a total of 3.5 full turns if the screw is turned in until it stops).* **Return to the Factory setting if you have difficulty starting the unit.**

Damper setting for Wheat & Rye - Turn the Screw in 3 turns from the Factory Setting and make sure the damper blade rests against the setscrew. *(This is reversing the screw a total of 2 full turns if the screw is turned in until it stops)* **Return to the Factory setting if you have difficulty starting the unit.**

FOR MORE INFORMATION ON FINE-TUNING THE DAMPER SEE PAGES 41 - 44 "COMBUSTION AIR DAMPER"

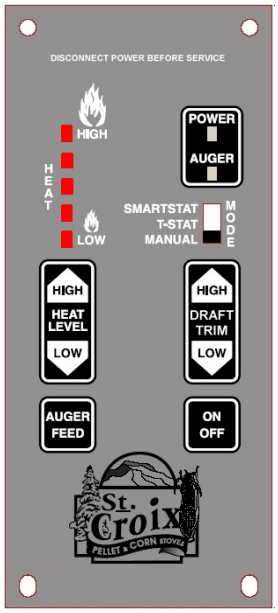

Figure 26

Changing the Program on the Control Board

To change the program the Stove must be in the **OFF** position, the Stove must be **cooled down so the Proof of Fire switch is open** and the Thermostat slide switch must be in the **Manual mode**. *(See figure 26)*

Press & hold Auger Feed Button, then press & ***release*** the Draft Trim ***High & Low*** Buttons. The LED lights that indicate the heat level will flash. The number of times the lights Flash will indicate which program is running.

Program 1 – LED lights flash *once*

Program 2 – LED lights flash *twice*

Program 3 –LED lights flash *three times*

Program 4 – LED lights flash *four times*

Lighting Your Stove.

WARNING: - Risk of Fire.
- **-Do not operate with the Firebox door or Ash Removal doors open**
- **-Do not store Fuel or other Combustible material within marked Installation Clearances.**
- **-Inspect and Clean Flues and Chimneys regularly.**

Danger: Risk of Fire or Explosion - Do not burn Garbage, Gasoline, Drain Oil or other Flammable Liquids.

WARNING: The auger can start at any time while the Stove is running, this is a high torque motor that is capable of doing SERIOUS harm to fingers. Keep fingers and other objects away from the auger

When lighting your Stove for the first time the auger tube will be empty, it helps to hold the "Auger Button" in until you hear fuel drop into the burn pot. Any of the approved listed fuels will be fed from the large hopper to the burn pot. The smaller hopper should only be filled with pellets to be used in the ignition process.

1. Make sure there is Fuel in the hopper.

2. Press the ON/OFF button once to turn on the Stove.

The Start up Program works as follows:

a. The Combustion Fan comes on at high speed and the control board checks to make sure the Vacuum Switch locks in.

b. When the board senses the Vacuum Switch the exhaust fan speed drops to the #1 setting, the Revolution burn pot will cycle to a clean section, pellets will start feeding from the small hopper for 3 minutes and the igniter comes on to ignite the pellets.

c. After 9 minutes the board shuts off the igniter and starts feeding pellets from the small hopper on the #1 setting for another 9 minutes. If the board senses P.O.F. then the Stove has started successfully.

d. If the board fails to sense P.O.F. it will repeat step c and continue feeding fuel on the #1 setting for 5 more minutes.

The board will check for P.O.F. again. If the board still fails to sense the Proof of Fire switch the Stove will go into "Safety Shutdown" (See section on Diagnostic Features on page 45.) If this happens, repeat the Start-Up process.

Shutting The Stove Off *(Refer to Figure 23)*

1. Press the On/Off switch once; the lights will go off and the fire will go out in a few minutes. The board essentially goes into "Safety Shutdown".

2. As long as the temperature within the Exhaust System remains above 110°F, the Combustion (Exhaust) Fan will continue to run. When the P.O.F. switch drops out the Combustion Fan will run for another 10 minutes before finally shutting down completely.

NEVER unplug the Stove to shut it off. Doing so may cause a significant amount of smoke to enter the room.

Combustion Air Damper Adjustment

Do not neglect to adjust the Combustion Air Damper during the break in period of your new Stove *(See Figure 27 below).* Your Stove is equipped with an air inlet damper. The purpose of this damper is to adjust combustion airflow to match the characteristic of each specific air inlet and chimney configuration. See figure 25 on page 39 for initial damper adjustments. The damper will most likely only need a small adjustment during the break-in period. Break-in requires the burning of 15 bushel of corn or 15 bags of pellets or a continuous burn for two weeks. The setscrew is a useful tool in making adjustments to the Air Intake damper. Adjust the damper by turning the screw a 1/2 turn counter-clockwise to open (**Remember to use the handle to place the damper against the screw)** or by turning the screw a 1/2 turn clockwise (closed). Wait 10 minutes to allow the burn to adjust to the new setting. Making too many changes in a short period of time will not allow for an accurate adjustment. To know if the damper needs to be adjusted you should learn to recognize how Corn, Wheat, Rye, Pellets, Cherry Pits & Distiller's Grain burn in this Stove system.

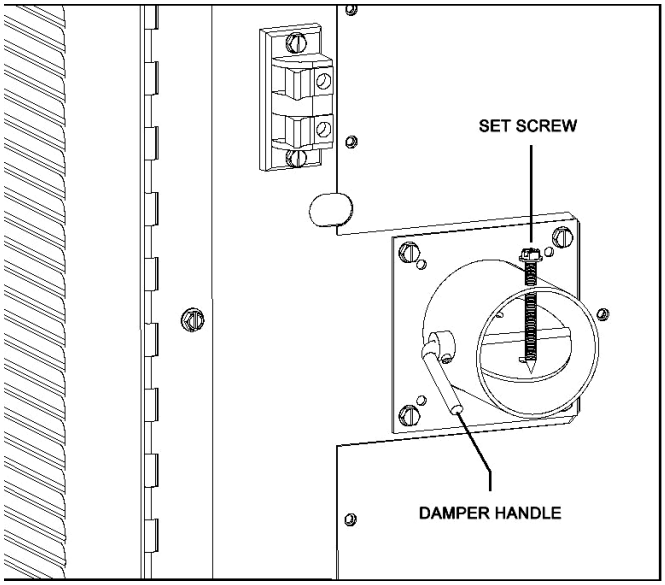

Figure 27

When burning corn, wheat, rye & Distiller's Grain the burn pot should be **"BALANCED**". This means the fuel that is being augered into the burn pot rapidly turns into glowing coals. If you see a lot of unburned fuel in the pot, an adjustment may be needed. In an unbalanced pot, the corn, wheat or rye will quickly stick together and prevent the proper flow of combustion air. The pot will overload and the fire will go out.

When burning pellets make sure to check for the formation of creosote in the unit and venting system. Constantly running the Stove on a low setting with too much combustion air may cause creosote to form. Burn pot temperatures can be "too cool" when burning pellets on low with too much draft. Once the damper is adjusted for your installation, it should not be necessary to make any further adjustments to the damper. The combustion air is automatically increased every time the feed rate is advanced on the control board. If you notice a difference in the operation of the Stove, ***first check to see if the Stove needs cleaning then check to see if there has been a change in the fuel you are burning.*** The moisture content of your corn may be too high or the quality of the pellets you are burning may have changed.

If you experience problems adjusting the Stove during the Break-In Period, contact your dealer. Some chimney systems will fall outside the norm, for example, a chimney with excessive draft or one with a long horizontal run.

Damper Adjustment Procedure.

Once the Stove has been lit for the first time, the damper will need to be adjusted. The process is different for Corn than Pellets. This may take some time, so please be patient during this process. This Damper Adjustment process only needs to be done once. After the damper has been adjusted to the unique installation in your home, the control board will do the rest.

Additional draft adjustments can be made using the Draft trim feature built into the control board. Read point 4a on page 37 and read the "Frequently Asked Questions" in the back of the manual.

Terminology used when burning Corn, Wheat, Rye or Distiller's Grain

1. **Balanced** burn pot. This means the corn rapidly turns into red-hot coals once it is in the burn pot.

2. **Lag time**. This is the time it takes for the corn to start burning and the burn pot to become balanced. Corn will tend to stick together in a clump in the burn pot if the corn feeds in faster than it's burning.

3. **Overloaded** burn pot. Once the corn has formed a clump in the burn pot the pot will overload and slowly the fire will die out.

Procedure for adjusting the damper for burning Corn, Wheat, Rye & Distiller's Grain:

a. Once the Stove is burning, leave the control board on the #1 setting for ½ an hour. This will allow the Stove to warm up before any adjustments to the damper are made. After ½ an hour, look in the burn pot to see if the burn pot is balanced. The Stove should be burning fine and an adjustment is most likely not needed.

b. Advance the heat setting to #2 and let the Stove burn at this setting for ½ an hour. Check the burn pot to see if it is balanced. Most likely the Stove will be burning fine at this point.

c. Advance the heat setting to #3 and let the Stove burn at this setting for ½ an hour. Check the burn pot to see if it is balanced. **Remember:** Look at the coals in the pot, not at what the flame looks like. Most likely the damper will not need to be adjusted.

d. Advance the heat setting to #4 and let the Stove burn at this setting for ½ an hour. Check to see if the pot is balanced. This is where a damper adjustment ***might*** need to be made. As the heat setting reaches the higher settings the **"Lag time"** can become too long if the air isn't adjusted correctly. If you notice that the coals are being covered up with unburned corn, adjust the damper to give it more air. **Remember:** Only turn the setscrew one ½ turn **counter-clockwise** to open the damper **and remember to use the handle to place the damper against the screw** (You might need to use a screwdriver to break up the clump of corn in the burn pot to allow for proper airflow). Wait 15 minutes to see if the burn pot becomes balanced. Repeat this step as many times as needed until the burn pot becomes balanced.

e. Advance the heat setting to #5 and let the Stove burn at this setting for ½ an hour. Check the burn pot to see if it is balanced. A small damper adjustment might need to be made at this time to make sure the "**Lag time"** isn't too long. **Remember:** Only turn the setscrew one 1/2 turn **counter-clockwise** to open the damper **and remember to use the handle to place the damper against the screw**. Wait 15 minutes to see if the burn pot becomes balanced. Repeat this step as many times as needed until the burn pot becomes balanced.

If the Stove has been connected to an existing chimney system that has good natural draft, the procedure mentioned in the last 2 points above may actually require that

the damper gets closed slightly instead of opened to compensate for the additional draft in the chimney system.

The process of adjusting the damper when burning Corn will take about 3 hours, but it only needs to be done once during the initial burn.

Procedure for adjusting the damper when burning Pellets & Cherry Pits:

When burning pellets & cherry pits in the Stove, the adjustment to the damper should be made when the stove is running in the pilot mode (#1 heat level), to prevent creosote formation in the venting system by running the stove with too much air on the low burns.

a. If a *heavy* black shiny build-up (difficult to wipe off) is noticed on the glass and inner surfaces, after the Stove runs on the low (pilot) setting for extended periods of time, the damper must be closed some. This may require the Stove to run in pilot mode for a while to become noticeable. If this build-up is noticed, close the damper 50% to start out with, and place the setscrew against the damper blade. Use this as the starting point to make additional adjustments with the setscrew. Some build up is normal and may be removed during the maintenance schedule.

b. Once the adjustment has been made for the pilot setting, slowly advance the Stove to the #5 Heat Level and observe the flame. If black soot (wipes off easily) builds up on the glass and black smoke is visible at the tips of the flames turn the setscrew one ½ turn counterclockwise and bring the damper blade up against the screw. Wait 5 – 10 minutes before attempting another adjustment. An occasional wisp of black smoke is normal every now and then.

Damper Adjustment & Pilot Settings, Thermostat Control - The Stove may be controlled with a thermostat to help maintain a more constant temperature. A corn or pellet Stove will be a little slower in reacting to a thermostat than the typical gas, electric or oil fired Stove. By using the Trim Button as mentioned in point 4b on page 37, the feed rate can be adjusted to allow the heat output during the pilot stage to be matched to the size of the home. A larger home will require more heat than a small one. Keep in mind that the Stove is constantly producing some heat that helps heat the home while the Stove is in pilot mode. If the home seems too warm, and the Thermostat is never calling for heat, a lower pilot setting may be a better fit for the home. **Remember: Choosing a lower Pilot setting may require the damper to be fine-tuned to match the lower feed rate. Monitor how the Stove is operating after a change is made and adjust the damper if needed.**

Diagnostic Features of the Control Board

The #2 LED, #3 LED and #4 LED lights on the LED Light bar *(See figure 23)* will flash to give a diagnostic code to help in diagnosing problems that may occur.

These conditions fall into 3 categories:

a. Heat related issues.

b. Vacuum related issues.

c. Issues related to the Revolution Pot, either not rotating every 2 hours or if the pot gets jammed.

The Diagnostic Lights flash as follows:

1. The **Proof of Fire** switch. This switch will sense the temperature of the Exhaust rising during start up. If the Exhaust temperature does not reach 110 degrees F, or if, during use, the temperature drops below 110 degrees F, the Auger will quit feeding fuel and the drum will start rotating until the Stove completes the safety shutdown. The #3 LED will start blinking. *(See Figure 23 on Page 36)*

2. The **High Limit** switch. This sensor will sense if the unit reaches temperatures that are too high for normal operation. If this happens the Auger will quit feeding and the drum will start rotating until the Stove completes the safety shutdown. The #4 LED light will start blinking. ***This is the same LED used for the Revolution Pot Sensor.*** *(See Figure 23 on Page 36)*

3. The **Vacuum** switch. For the Stove to operate correctly the firebox needs to be sealed. During the first 30 seconds after the Stove has been turned on the control board will check to see if the switch senses negative pressure (Vacuum) in the firebox of the Stove. If there is no negative pressure, the Auger will quit feeding and the drum will start rotating until the Stove completes the safety shutdown. The #2 LED will start blinking. *(See Figure 23 on Page 36)*

4. The **Revolution Pot sensor**. If the pot fails to rotate or jams during a rotation, both augers are disabled and the drum will start rotating until the Proof of Fire switch opens. The #4 LED will start blinking. ***This is the same LED used for the high limit switch.*** *(See Figure 23 on Page36)*

"Internal Alarm" - When the control board becomes unresponsive, the control board is in Internal Alarm. The control board has sensed one of the Safety Sensors. This may cause the stove to go out. In some cases, after waiting approximately 45 seconds the stove will start responding to the control board again. Many times, the cause of this is a change in the vacuum inside the Stove. This may be caused by excessive wind or by opening the Firebox door. The control board will monitor the vacuum switch and resume normal operation if the vacuum returns to normal.

Power Reset" - If the board becomes unresponsive for a long period of time, you must unplug the Stove, wait 10 seconds and plug the Stove back in to reset the board.

Safety Features

1. **"High Limit" Switch,** an overheat safety switch will shut off the fuel feed if the Stove reaches temperatures above normal operating temperature. This is a "Normally Closed" switch and is part of the Fan Limit Control. If the High Limit Switch trips several times, the problem in the Stove ***must*** be diagnosed before the Stove is put back in service, (Defective Room Fan, dirty Room Fan, dirty Air Filter, defective Fan Limit Control or possibly a bad Control Board)

2. **Vacuum Switch** also called the **Negative Pressure Switch**. When the Stove is turned on the exhaust fan will create a negative pressure in the firebox. The control board continually checks to see if Negative Pressure (vacuum) is present during operation of the Stove. If the exhaust venting system becomes clogged or obstructed, the firebox door is left open or the exhaust fan quits working the control board will go into "Safety Shutdown". For maintenance purposes there is a 60 second window to allow for cleaning the glass, etc. before the Stove shuts down. This allows sufficient time for the Daily Maintenance.

3. **Proof of Fire Switch** also called the **P.O.F.** This senses the temperature rise in the exhaust system. The switch is "Normally Open" and closes the circuit at 110 degrees. The Stove will shut down if temperatures above 110 degrees F are not sensed during start up or if the temperature drops below 110 degrees during normal operation.

4. **Hopper Lid Switch.** The hopper lid switch will shut off the auger motor when the hopper lid is open. Be sure the lid closes completely when refilling the hopper or the unit will shut down.

5. **Revolution Pot Sensor.** This is a micro switch located on the Revolution Pot drive shaft. It monitors the rotation of the drum during the Self-Cleaning action. If the drum does not rotate every 2 hours, the stove will go into shut down mode.

WARNING: These safety features are designed to protect life and property. Bypassing these features voids all warranties and the safety listing of the Stove.

The Lincoln SCR has been Safety Tested by an accredited, independent laboratory.

LINCOLN SCR MAINTENANCE

NOTE: WHEN YOU FIRST OPERATE YOUR STOVE, CHECK TO DETERMINE THE NEEDED CLEANING FREQUENCY. THE STOVE REQUIRES A MINIMUM AMOUNT OF DAILY MAINTENANCE. REQUIRED MAINTENANCE DEPENDS LARGELY UPON THE QUALITY OF FUEL BURNED AND THE RATE OF BURN. THE AMOUNT OF DAILY MAINTENANCE WILL INCREASE IF FUEL QUALITY DECREASES AND/OR THE BURN RATE INCREASES.

NOTE: FAILURE TO KEEP YOUR STOVE CLEAN, AS DESCRIBED IN THIS MANUAL, COULD RESULT IN POOR OPERATION, INEFFICIENT FUEL USAGE AND A POSSIBLE SAFETY HAZARD! IT IS THE RESPONSIBILITY OF THE OWNER/USER TO DETERMINE THE NEEDED MAINTENANCE FREQUENCY.

CAUTION: THE DOOR AND FRONT PART OF THE STOVE WILL BE HOT. DO NOT TOUCH ANY PART OF THE STOVE THAT IS HOT!

Daily Maintenance

1. **The Ash Pan.** Make sure the Ashpan is not too full. If the Ashpan is too full, the ash may not be dumped from the Revolution Pot when it runs a cleaning cycle.

2. **The Tube Scraper.** Pull the Tube Scraper back and forth a couple of times to keep the tubes clean. If the Tube Scraper feels sticky and difficult to move, check for the presence of creosote on the tubes. If creosote is present a damper adjustment may be needed or the Stove has become plugged and needs a thorough cleaning. Call Dealer for assistance. *(See figure 1 on Page 10 for the location of the Tube Scraper Rod).*

3. **Clean the Viewing Glass.** Use a dry paper towel to clean the glass. Quickly open the door and wipe the glass. The rate of burn will determine how often the window needs cleaning. Prolonged burning at a slow burn rate will result in the need for more frequent window cleaning. Cooling the Stove and wiping the window daily with a cloth or paper towel will normally keep the window from accumulating difficult to clean residue. Use of a glass cleaner ONLY permitted when the Stove is cold.

CAUTION: Do not slam the door. Do not operate the Stove with a broken or cracked glass. Replace only with heat resistant ceramic glass supplied by the manufacturer.

Periodic Maintenance

CAUTION: Periodic maintenance should only be done while the Stove is shut off and cold.

1. **Ashpan.** Empty the ash pan when it appears full (approximately twice a week). ***The frequency of cleaning the ash pan will depend on the quality and amount of Corn/Pellets being used.*** Carefully check to make sure the ash pan door is tightly closed after each time it has been opened.

2. **Revolution Burnpot.** Clean Burn Grate holes whenever needed. Clean the burnpot while it is in the Stove. Remove the pot Side Shields *(See Figure 19 on Page 31)* and use a stiff bristle brush to remove any ash build that may be plugging the holes. To clean the holes in the front of the pot remove the panel below the door and then remove the Igniter Assembly. Clean the holes in the front of the pot through the opening behind the Igniter. ***If the unit is slow in lighting, make sure the hole in front of the igniter is not plugged.***

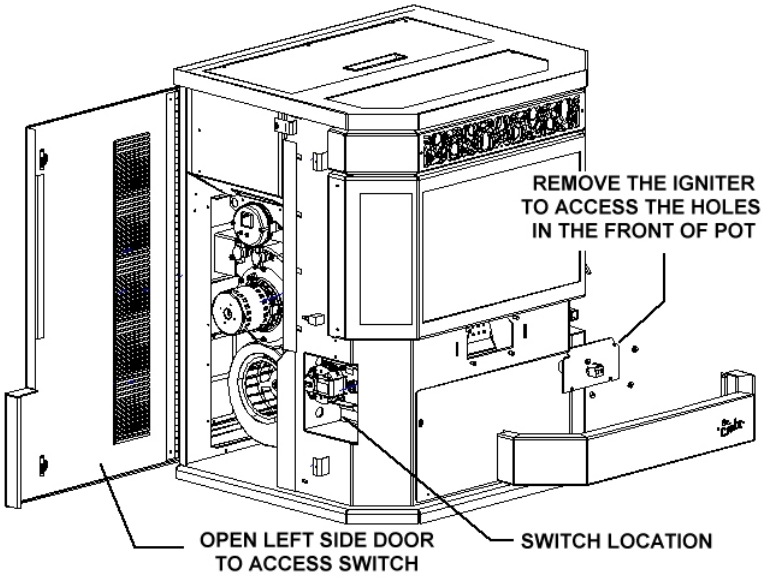

By tripping the switch lever, shown in detail in figure 28 below, the burn pot will cycle to another section. Repeat this until all 4 sections of the drum have been cleaned. Check each section and all holes with a small mirror to verify they are clean.

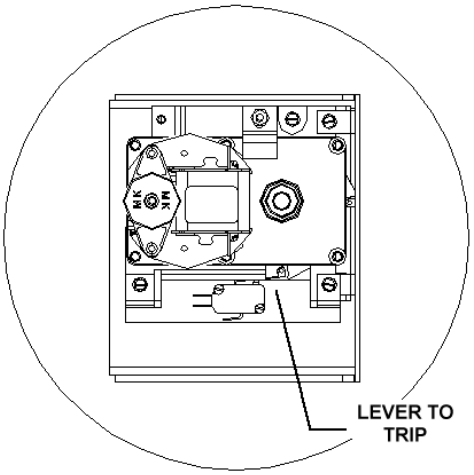

If the holes in the pot remain plugged, remove the Burnpot, *(as shown in Figure 19 on Page 31 & figure 20 on page 32)* and use a small metal object (Nail, Drill Bit, etc) to clean out plugged holes.

Figure 28

3. **Clean-Out Ports.** The Stove has 2 Exhaust Cleanout Ports located behind the Ashpan. Remove covers and clean once a month or every ton of fuel.

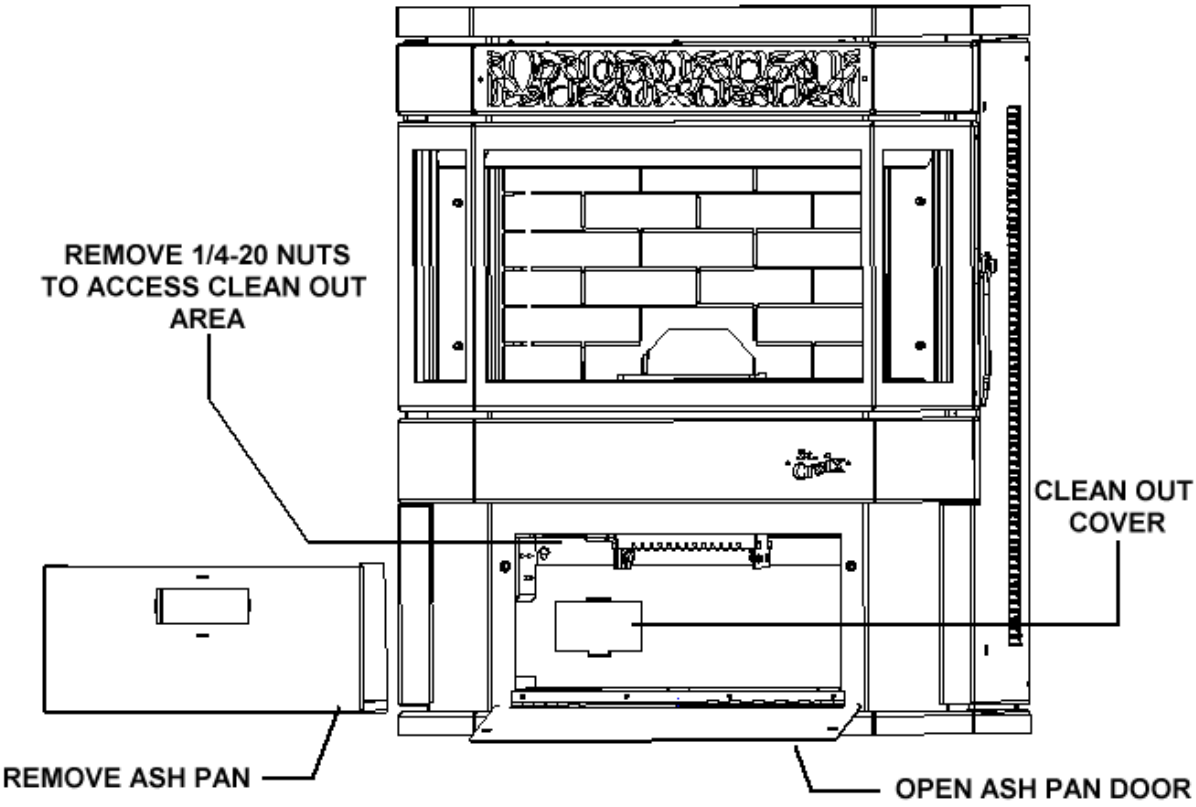

Figure 29

Frequency of cleaning depends on the amount of fuel being burnt and the quality of the fuel. **Failure to clean the ash traps will cause the Stove to become plugged with fly ash.**

4. **Heat Exchange Baffle.** Remove the baffle and clean the ashes that accumulate on a regular basis. Once a month or sooner, depending on the quality of fuel being used *(See Figure 30 on the next page)* Clean the baffle on a regular basis. Frequency of cleaning depends on amount of fuel being burnt and the quality of the fuel. Fuel with low ash content is recommended. **Failure to clean the baffle can cause the Stove to become plugged with fly ash.**

Baffle Removal

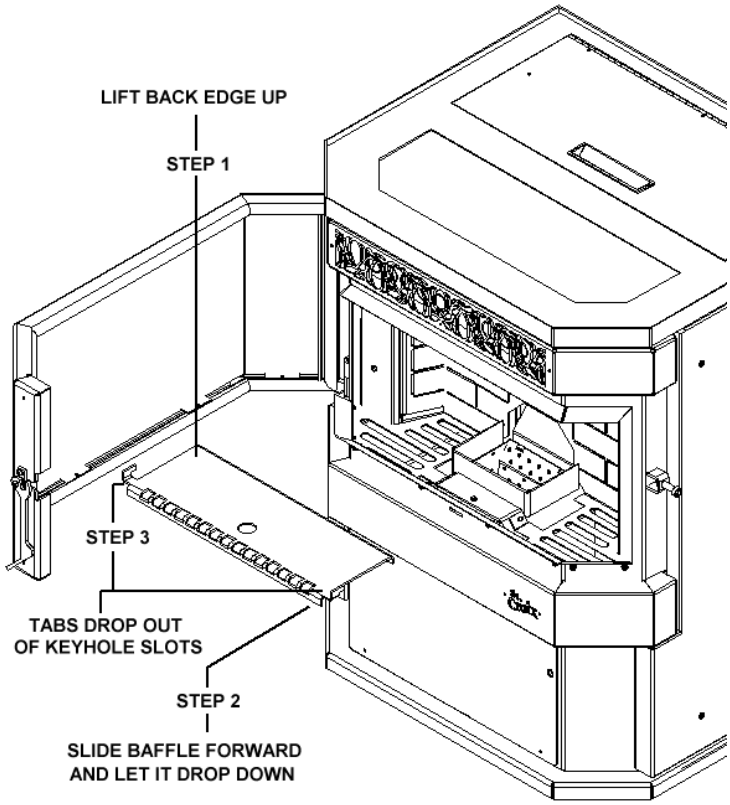

To remove the baffle, lift the back of the baffle up to clear the inner back of the Stove and slide towards the front of the Stove. The baffle will slide out of the keyhole slots and drop down.

When putting the baffle back in the Stove, make sure the Tabs are in the Keyhole slots and the back of the baffle is lifted up over the inner back to keep the Baffle locked in place.

Figure 30

5. **Exhaust System.** Periodic cleaning of the exhaust system is required. Under certain conditions chimneys may plug up rapidly. Dirty grain that has a high moisture content or pellets with high ash content and installations with elbows and horizontal runs require more frequent chimney cleanings. See Page 29 “Preventing Chimney Fires”. The products of combustion will also contain small particles of fly ash. The fly ash will collect in the exhaust vent and restrict the flow of the flue gases. Judge the frequency of cleaning by checking the amount of ash that accumulates in the elbows or tee’s of the exhaust system. Ask the dealer for suggested frequency of cleaning, equipment needed and procedures for cleaning. Check the exhaust system at least once every two months during the heating season.

6. **Gaskets.** Periodically inspect the condition of the rope gasket around the door, window and ash door. Replace as needed.

7. **Air Filter.** Check the Air Filter at least once a month and clean or replace when needed. The filter material may be purchased at a local hardware stove and cut to size to fit into the filter bracket.

Many dealers offer a Service Contract that will cover Yearly Maintenance. Contact your St. Croix Dealer for assistance in maintaining your Stove in top condition.

Yearly Maintenance

Yearly maintenance is designed to assure safe operation, prolong the life of the Stove and help preserve its aesthetic appeal.

1. **Spring Shutdown.** After the last burn in the spring, cool the Stove and remove all fuel from the hopper and the auger system. Thoroughly clean the burn pot, burn pot box, ash pan and ash traps behind the ash pan. *(To locate the ash traps see figure 29 on page 49)*

2. The exhaust system should be thoroughly cleaned at least annually. Call your dealer for this service.

3. The motor/fan area behind the firebox and under the hopper should be vacuumed annually.

NOTE: UNPLUG THE STOVE. Remove the access panels of the Stove. Carefully clean or vacuum any dust, cobwebs and household dust. Carefully vacuum around the fan motors. If electrical wires become disconnected call your dealer for service if needed.

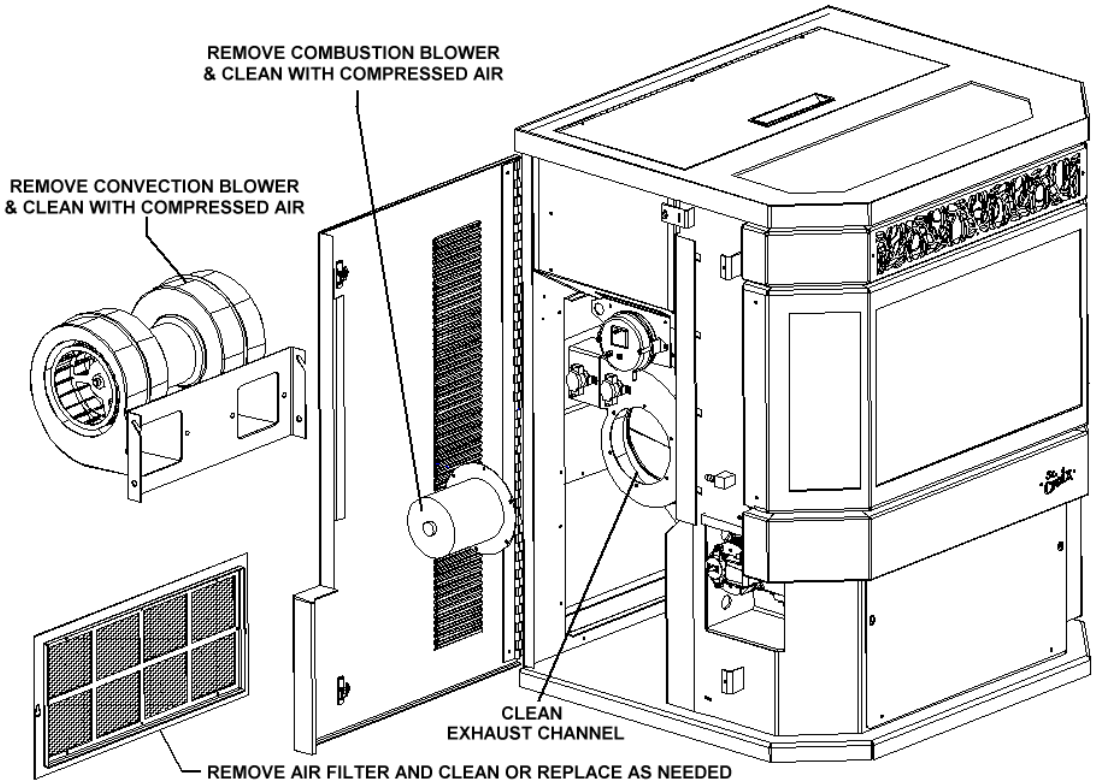

Figure 31

4. The Exhaust Fan (Combustion Fan) should be removed (may require a new gasket) and cleaned with compressed air annually. Call dealer for this service. Annual oiling of the motors is not needed.

5. The Convection Blower should be removed and cleaned with compressed air annually. There are 2 oil ports on the motor.

Fall Startup. Prior to lighting the first fire check the outside area around the exhaust and air intake systems for obstructions. Try all controls to see that they are working prior to lighting a fire.

SAFE OPERATION.

1. **Disposal of Ashes.** Ashes should be placed in a metal container with a tight fitting lid. The closed container of ashes should be placed on a non-combustible floor or on the ground, well away from all combustible materials, pending final disposal. If the ashes are disposed of burial in soil or otherwise locally dispersed, they should be retained in the container until all cinders have thoroughly cooled.

2. **Never use Gasoline,** gasoline type lantern fluid. Kerosene, charcoal lighter fluid or similar liquids to start or "freshen up" a fire in this heater. Keep all such liquids well away from the heater while it is in use.

3. **Creosote, Soot and Fly Ash:** Formation and Need for Removal. The products of combustion will contain small particles of Fly Ash. The fly ash will collect in the venting system and restrict the flow of flue gases. Incomplete combustion, such as occurs during start-up and shut-down, or incorrect operation of the room heater will lead to some soot or creosote formation which will collect in the venting system. The exhaust system should be inspected regularly during the heating season to determine if creosote buildup has occurred. Check more frequently at first to determine a schedule for cleaning the venting system based on individual use of this Corn/Pellet-burning heater. If creosote has accumulated, it should be removed to reduce the risk of a chimney fire.

4. **Do not Overfire this unit.** Follow all instructions regarding the proper use of this heater.

Wiring Schematic

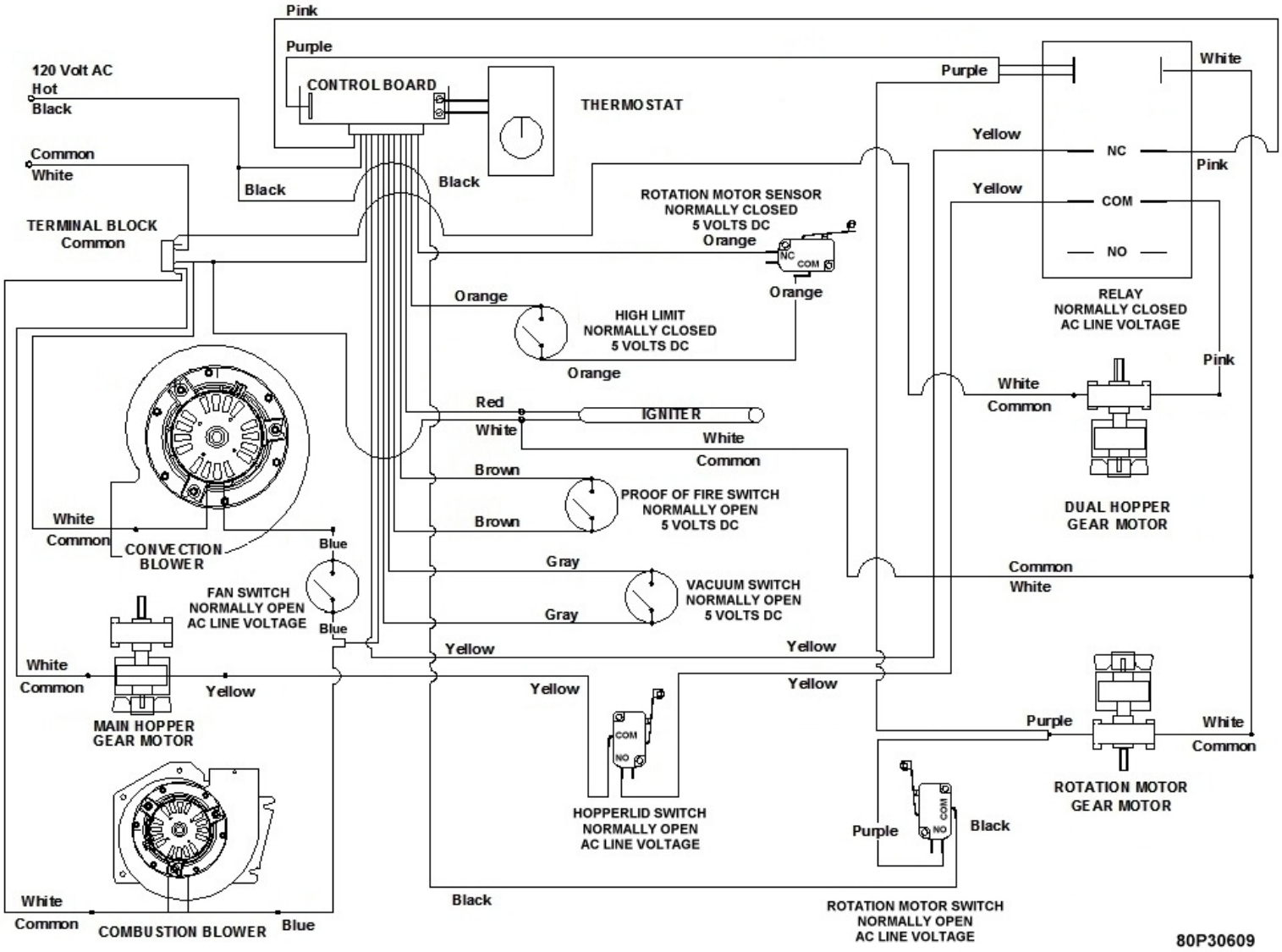

Figure 32

The Electrical Rating of this Stove is: 120 Volt, 60 Hz, 3 AMP. The minimum recommended circuit is 15 Amp. A dedicated circuit for the Stove is recommended.

CAUTION: The electrical components of the Stove are not owner serviceable. Call your dealer for proper diagnosis of electrical problems and service to those components.

Parts Layout

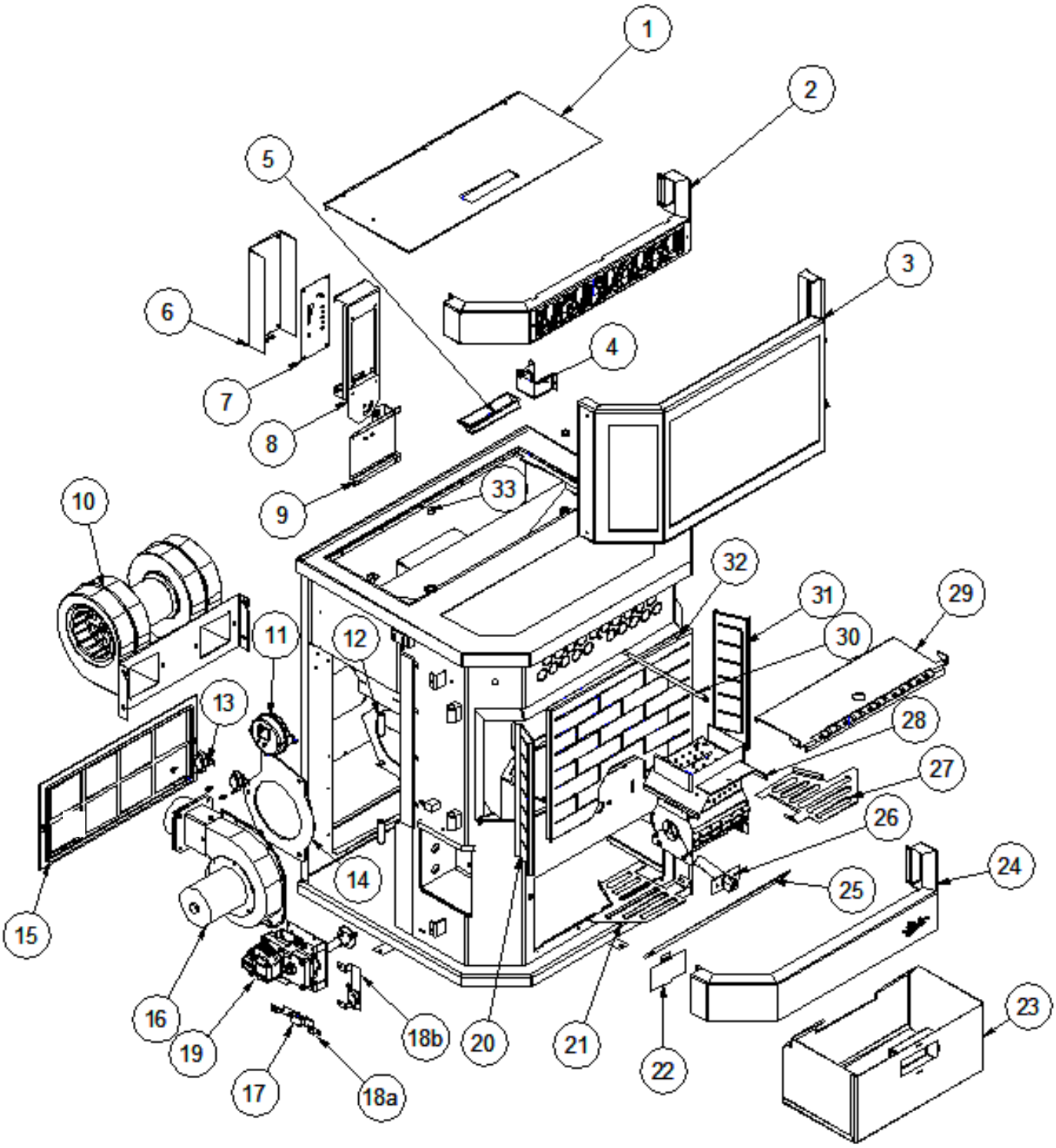

Figure 33

Parts Layout - Continued

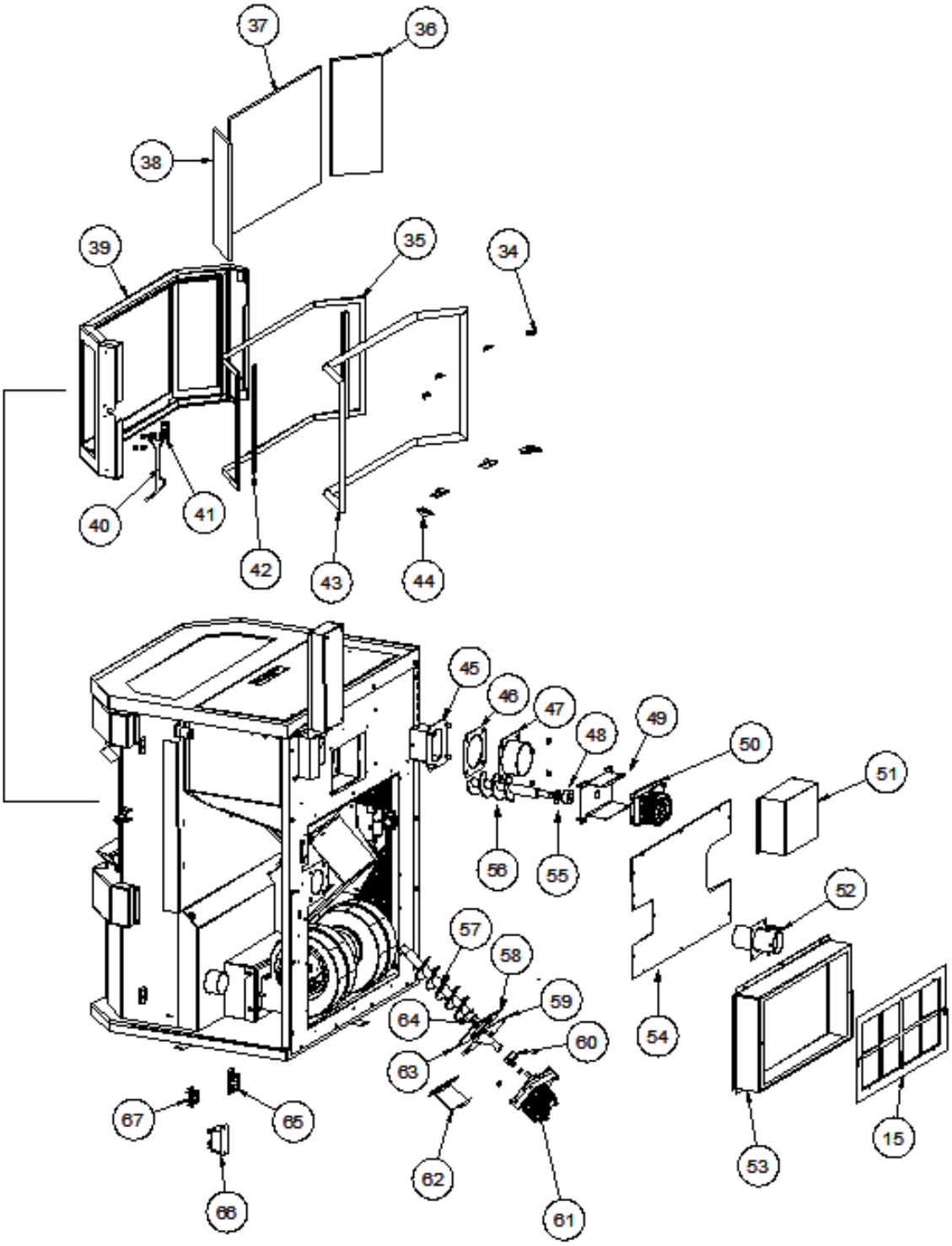

Figure 34

Part Numbers / Description

See Figures 33 and 34

#	PART NUMBER	DESCRIPTION
1	80P54031	HOPPERLID WELDMENT
2	80P53770	HOT AIR BOX
3	80P53725	BAY DOOR BLACK - COMPLETE
4	80P30697	HOPPER SWITCH BOX (SEE 17 FOR SWITCH)
5	80P20183	HANDLE PULL
6	80P30519	COVER/HARNESS RESTRAINT
7	80P30608	CONTROL BOARD
8	80P53945	CONTROL BOARD BOX
9	80P53992	MOUNT BRACKET ASSEMBLY
10	80P53977	CONVECTION BLOWER ASSEMBLY
11	80P52628	VACUUM SWITCH
12	80P65021	1/2" X 2" DOWEL PIN (2 PER STOVE)
13	80P20038	P.O.F. SWITCH / FAN SWITCH
14	80P20168	COMBUSTION FAN GASKET
15	80P54000	FILTER ASSEMBLY
16	80P53933	COMBUSTION FAN ASSEMBLY
17	80P30268	HONEYWELL SWITCH (**USED IN 3 PLACES**)
18a	80P30709	ROTATION SENSOR BRACKET
18b	80P30707	ROTATION SWITCH BRACKET
19	80P53979	REVOLUTION MOTOR DRIVE ASSEMBLY
20	80P30594	STEEL BRICK – LEFT PANEL
21	80P30492	DECORATIVE GRILL – LEFT HAND
22	80P30162	CLEAN OUT COVER PLATE
23	80P53931	ASH PAN WELDMENT
24	80P30590	LOWER PANEL
25	80P30496	ASH CLEAN OUT COVER
26	80P54047	IGNITER ASSEMBLY
27	80P30493	DECORATIVE GRILL – RIGHT HAND
28	80P53958	REVOLUTION POT - COMPLETE
29	80P30506	HEAT EXCHANGE BAFFLE
30	80P52567	TUBE SCRAPER ROD
31	80P30593	STEEL BRICK – RIGHT PANEL
32	80P30577	STEEL BRICK – BACK PANEL
33	80P30561	HOPPER MAGNETS

34	80P52074	BAY DOOR GLASS CLIP - TOP
35	80P20027	5/8” WINDOW GASKET
36	80P20035	BAY SIDE GLASS
37	80P20034	BAY FRONT GLASS
38	80P20035	BAY SIDE GLASS
39	80P53724	BAY DOOR FRAME - WELDED
40	80P53773	DOOR HANDLE
41	80P53723	MOUNT PLATE ASSEMBLY
42	80P20024	¾” WINDOW GASKET
43	80P30248	5/8” DOOR GASKET, ROPE
44	80P52796	BAY DOOR GLASS CLIP - BOTTOM
45	80P53677	EXHAUST ADAPTER PLATE WELDMENT
46	80P52232	QUICK DISCONNECT GASKET
47	80P52887	QUICK CONNECT PIPE WELDMENT
48	80P20248	5/8" COLLAR WITH SETSCREW
49	80P53990	HOPPER B MOTOR MOUNT ASSEMBLY
50	80P20278	AUGER MOTOR (**USED IN 3 PLACES**)
51	80P30248	ROTATION MOTOR COVER (**USED 2 PLACES)**
52	80P53871	INTAKE DAMPER WELDMENT
53	80P30501	FILTER BOX
54	80P30483	BACK PANEL COVER
55	80P50858	AUGER BUSHING WASHER
56	80P53943	HOPPER B AUGER WELDMENT
57	80P53666	AUGER WELDMENT
58	80P20245	AUGER GASKET
59	80P52957	MOTOR MOUNT BRACKET ASSEMBLY
60	80P20248	5/8" COLLAR WITH SETSCREW
61	80P20278	AUGER MOTOR
62	80P30191	MOTOR RETAINER BRACKET
63	80P20245	AUGER GASKET
64	80P50858	AUGER BUSHING WASHER
65	80P30045	SPEAKER TERMINAL-THERMOSTAT
66	80P30431	RELAY - REVOLUTION MOTOR
67	80P52630	TERMINAL BLOCK
Not Shown	80P30612	WIRING HARNESS

TROUBLESHOOTING & FREQUENTLY ASKED QUESTIONS

Additional Installation Recommendations

1. The fans of this Stove may cause a negative pressure area in the room where this Stove is installed.
2. Outside Combustion Air may be needed if:

    a. The unit does not vent steadily, smell, experiences smoke rollout, burns poorly, or back drafts whether or not there is combustion present.
    b. Any of the symptoms listed above are alleviated by opening a window slightly on a calm day.
    c. The house is sealed with a well-sealed vapor barrier and tight fitting windows and doors and/or has any powered devices, which exhaust house air.
    d. There is excessive condensation on the windows during the winter.
    e. A ventilation system is installed in the house

3. Adhere to all Clearances and Restrictions specified in the Installation Instructions of this Stove.

Additional Operation Recommendations

1. Store fuel in sealed containers in a dry environment to prevent the fuel from absorbing moisture and becoming damaged.

2. Creosote formation and Cleaning.

    a. Establish a routine for the storage of fuel, care of the Stove and Firing Techniques.
    b. Check daily for creosote build-up until experience shows how often cleaning is necessary.
    c. Be aware that the hotter the fire, the less creosote is deposited, and that weekly cleaning may be necessary in mild weather, even though monthly cleaning may be enough in the coldest months. Run the Stove on the hottest setting once a day for 30 – 45 minutes to prevent excessive build-up in the Stove.
    d. Have a clearly understood plan to handle a chimney fire. Contact the local fire department for information if needed.
    e. Keep the doors closed and all seals in good condition while operating the Stove.
    f. INSPECT THE FLUE PIPES, JOINTS AND SEALS REGULARLY TO ENSURE THAT SMOKE AND FLUE GASES ARE NOT DRAWN INTO, AND CIRCULATED BY THE AIR-CIRCULATION SYSTEM.
    g. CLEANING OF THE HEAT EXCHANGER, FLUE PIPE, CHIMNEY AND DRAFT INDUCER IS ESPECIALLY IMPORTANT AT THE END OF THE HEATING SEASON TO MINIMIZE CORROSION DURING THE SUMMER MONTHS CAUSED BY ACCUMULATED ASH.
    h. Do Not Use Chemicals or Fluids to Start The Fire.
    i. Do Not Burn Garbage, Gasoline, Naphtha, Engine Oil, or Other Inappropriate Materials

j. The Stove will not operate during a power failure, unless a Battery Back-up system is used during brief power outages. Prolonged Power Outages will require the use of a generator to operate the Stove.

The Stove is very trouble free in operation when properly maintained and quality fuel is used. When the Stove fails to operate properly, troubleshooting by the operator of the Stove is limited. Please read the following guide for answers to frequently asked questions

Questions:

1. When first starting the Stove the auger tube is empty, which will delay feeding fuel to the burn pot. This will in some cases prevent the Stove from starting.

   Solution: First allow the revolving drum to rotate after turning the Stove on. Prime the auger tube with fuel if the auger tube is empty, by holding the "Auger Feed" until the tube is full.

2. **My Stove keeps overloading the burnpot.** First check the quality and/or moisture content of your fuel. It should be 15% or less. Also make sure you are using clean fuel. Otherwise this is mainly caused by improper combustion. (See ***Damper*** Adjustment section of the Operations Manual) Besides the damper adjustment there are several areas that can have an effect on the combustion process.

   Solution: Check all Gaskets, Doors and Door Latching Systems for air leaks. Any leaks in these areas will negatively affect the burn process and cause the pot to overload. If all parts check out OK, then the Feed Rate ***must*** be reduced to prevent the pot from overloading.

3. **My Stove isn't burning and the number 2 LED light is blinking *(the pot may be continually rotating)*** This diagnostic light indicates the vacuum switch no longer senses negative pressure in the firebox area of the Stove. What caused the Stove to go out?

   a. The door of the unit was left open longer than 60 seconds. **(See solution)**
   b. The ash pan door was left open for longer than 60 seconds. **(See solution)**
   c. The combustion fan is not running. (Defective fan or control board)
   d. The vacuum switch is defective.
   e. The vacuum hose is disconnected
   f. The vent system is plugged with fly-ash.

   Solution: **If the fire is out**, re-light the Stove. **If the fire is still burning** make sure all doors are securely latched and hold down the On/Off button (approximately 5 seconds) until Stove starts up again. This will re-start the Stove in the start-up program.

3. **My Stove isn't burning and the number 3 LED light is blinking *(the pot may be continually rotating)*.** This diagnostic light indicates that the Proof of Fire Switch no longer senses a fire in the Stove. First check to see if there are pellets in the hopper. If there are pellets in the hopper, why did the Stove go out?

   a. Unburned fuel in the burnpot means the fire went out before the auger quit feeding.

Solution: Too much Combustion Air on the pilot setting. Adjust the air damper. (See section covering an ***Unbalanced Burnpot).*** Corn/Pellets would still feed until the P.O.F. switch eventually shuts the Stove down. Adjust the damper. (See ***Damper Adjustment*** in the Operations Manual)

A power Failure could also cause this. If the Stove is still hot when the power comes back on, the feed system will resume at level 1. If the fire had gone out in the pot, the feed would continue to run until the Proof of Fire switch dropped out and shut the Stove down.

b. If all the fuel is burned up, means the auger quit feeding fuel while there was still a fire in the burnpot. Check to see if there is fuel in the hopper. If the hopper is empty, fill the hopper and re-light the Stove.

If there is fuel in the hopper check to see if there is an obstruction in the auger system or if the auger set screw is loose.

Solution: Remove obstruction and re-light the Stove or tighten the setscrew on the auger shaft.

5. **My Stove isn't burning and the #4 LED light is blinking *(the pot may be continually rotating).*** This means the High Limit has shut the Stove down or the Rotation Pot Sensor failed to sense a pot rotation during the cleaning cycle. First check if the furnace pot is jammed. Check to see if the switches are lined up correctly. If the rotation pot is functioning correctly, then check the Convection Blower to see if it is defective or needs cleaning. The high limit switch may be also defective. It is best to call your dealer for support when trying to troubleshoot the High Limit Switch. Do not use your Stove if the High Limit switch frequently trips.

   The Convection fan initially is turned on by a fan switch attached to the exhaust system. The temperature must reach 110 degree F. A defective Fan Switch or if the connections are bad would prevent the Convection Fan from running. This would cause the High Limit Switch to trip.

6. **I turned the Stove on with the On/Off switch and nothing happens.** First check to see if the Stove is plugged in and the receptacle has power to it.

   Solution: Check the fuse on the back of the control board. Replace with a 125 Volt, 5 Amp fuse.

7. **Why is my glass dirty?** Normal operation of your St. Croix Corn/Pellet Stove will produce a white build-up on the glass that wipes off with a dry paper towel. However extended burning on the low setting only will produce a tan color. These types of build-up on the glass are normal. A heavy shiny black build-up on the glass could indicate a problem (too much combustion air).

   Solution: Adjust the combustion air setting to the proper setting, using the damper or the Draft settings on the Board, or a combination of both. It also could be an indication that the Stove is getting plugged and needs a good cleaning. Refer to the section in the manual that covers the Daily, Periodic and Yearly Maintenance of the Stove.

8. **Are there any adjustments that can be made, through the control board, to the amount of fuel that is fed into the burnpot?**

Answer: There are several ways to adjust the amount of fuel that is fed into the burnpot. The feed rates can be fine-tuned while the Stove is in operation by ***pressing and holding*** the "Auger Feed" button down and then ***either*** pressing and releasing the "Heat Level High" button to advance the feed rate higher, ***or*** pressing and releasing the "Heat Level Low" button to decrease the feed rate.

There are 5 levels on the control board and they are indicated by a single flash of the LED's. The default setting is the center LED. This gives 2 adjustments increasing the feed rate (LED's 4 & 5) and 2 adjustments decreasing the feed rates. (LED's 1 & 2) The ON time is ***increased or decreased*** .25 seconds with each adjustment.

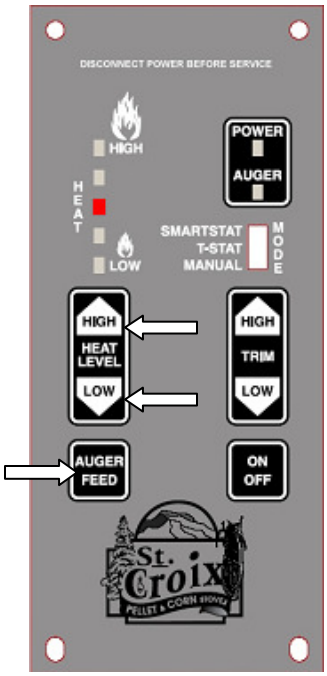

Figure 29

9. **Are there any adjustments that can be made, through the control board, to the Combustion Fan voltages to help adjust the draft?**

Answer: The Draft can be adjusted in a similar fashion as mentioned in the previous example.

The Fan voltages can be fine-tuned while the Stove is in operation by ***pressing and holding*** the "Auger Feed" button down and then ***either*** pressing and releasing the "Draft Trim High" button to advance the voltages higher, ***or*** pressing and releasing the "Draft Trim Low" button to decrease the fan voltages.

There are 5 levels on the control board and they are indicated by single flash of the LED's. The default setting is the center LED. This gives 2 adjustments increasing the voltage (LED's 4 & 5) and 2 adjustments decreasing the voltage. (LED's 1 & 2) The voltage is ***increased or decreased*** 2.5 volts with each adjustment.

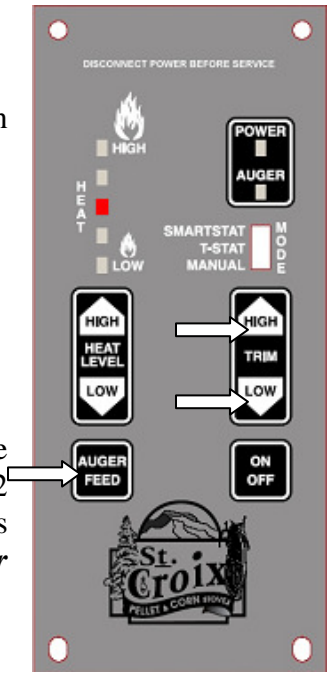

Figure 30

10. **Are there Cycle Time adjustments on the Control Board for different types of fuel?**

Answer: There are 4 individual programs on the control board, each with a different Cycle time.

The Control board has been factory set at the 7.5-second Cycle Time. When reprogramming the control board, you will see all of the LED lights flash, as shown in the figure to the right. The LED lights flash in the following manner:

Program 1 - 7.5 second cycle time. The LED's flash **once**. This program is for use with Pellets & Cherry Pits.

Program 2 - 8.5 second cycle time. The LED's flash **twice**. This program is for use with Pellets, Cherry Pits, Corn, Wheat, Rye, Distillers Grain.

Program 3 - 9.5 second cycle time. The LED's flash **three times**. This program is for use with Pellets, Cherry Pits, Corn, Wheat, Rye, Distillers Grain.

Program 4 - 10.5 second cycle time. The LED's flash **four times**. This program is for use with Pellets, Cherry Pits, Corn, Wheat, Rye, Distillers Grain.

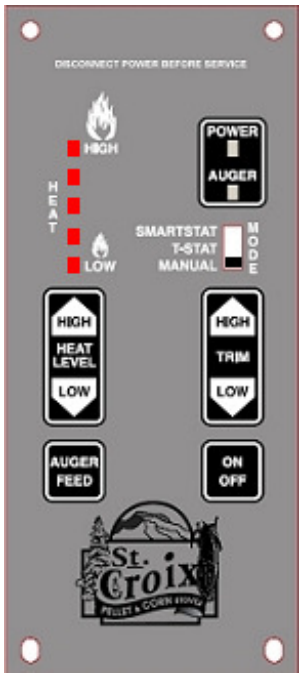

Figure 31

11. **How do I change to a different Program on the control board?**

First the Stove must be turned off and cooled down.

Step 1 - The Thermostat switch must be in the **Manual** position.
Step 2 – Press and hold both of the **Draft Trim** High and Low Buttons.
Step 3 – Press the **Auger Feed** Button. Release all 3 buttons at the same time.
Step 4 – Observe the LED light flashing as described in point 10 above.

Changing the Cycle Time will change the BTU Input of the Stove. The longer the Cycle time the lower the BTU rating.

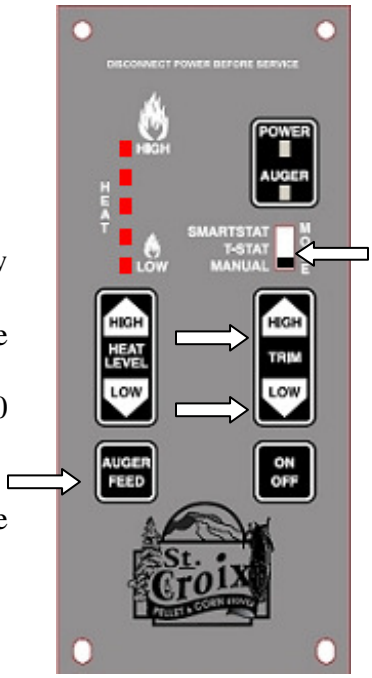

Figure 32

LINCOLN SCR WARRANTY

The Stove manufactured by Even Temp, Inc. is warranted for five (5) years, to the original owner, against defects and workmanship on all steel parts (excluding the burn grate) and two (2) year on electrical components from the date of sale to the original owner. There specifically is no warranty on the paint, glass, burn grate and all gaskets. There is no written or implied performance warranty on the Stove, as the manufacturer has no control over the installation, daily operations, maintenance or the type of fuel burned.

This warranty will not apply if the Stove has not been installed, operated and maintained in strict accordance with the manufacturer's instructions. Burning other than approved quality fuels may cause Stove damage and could void the warranty.

The warranty does not cover damage or breakage due to misuse, improper handling or modifications.

A warranty registration card is provided. The card is to be checked and signed and returned to factory by the owner. Appropriate information is to be noted on the card.

All claims under this warranty must be made through the dealer where the Stove was purchased. If an inspection by the dealer indicates that a warranty claim is justified, and that all conditions of this warranty have been met, the manufacturer's total responsibilities and liabilities shall be to repair or replace, at the manufacturer's option, the defective part(s). All costs of removal, shipment to and from the dealer or manufacturer, any losses during shipment and reinstallation and any other losses due to the Stove being removed shall be covered by the owner of the Stove.

NEITHER THE MANUFACTURER, NOR THE SUPPLIERS TO THE PURCHASER, ACCEPTS RESPONSIBILITY, LEGAL OR OTHERWISE, FOR THE INCIDENTAL OR CONSEQUENTIAL DAMAGE TO PROPERTY OR PERSONS RESULTING FROM THE USE OF THIS PRODUCT. ANY WARRANTY IMPLIED BY LAW, INCLUDING BUT NOT LIMITED TO IMPLIED WARRANTIES OF MERCHANTABILITY OR FITNESS, SHALL BE LIMITED TO ONE (1) YEAR FROM THE DATE OF ORIGINAL PURCHASE. WHEN A CLAIM IS MADE AGAINST THE MANUFACTURER BASED ON THE BREACH OF THIS WARRANTY OR ANY OTHER TYPE OF WARRANTY EXPRESSED OR IMPLIED BY LAW, MANUFACTURER SHALL IN NO EVENT BE LIABLE FOR ANY SPECIAL, INDIRECT, CONSEQUENTIAL OR OTHER DAMAGES OF ANY NATURE WHATSOEVER IN EXCESS OF THE ORIGINAL PURCHASE PRICE OF THIS PRODUCT. ALL WARRANTIES BY MANUFACTURER ARE SET FORTH HEREIN AND NO CLAIM SHALL BE MADE AGAINST MANUFACTURER ON ANY ORAL WARRANTY OR REPRESENTATION.

Some states do not allow the exclusion or limitation of incidental or consequential damages, or limitations of implied warranties; therefore the limitations of exclusions set forth in this warranty may not apply to you. This warranty gives you specific legal rights, and you may have other rights, which vary from state to state.

Notes:

After the break in period, please note any adjustments that were made to the Feed Trim and Draft Trim on the control board in the area below. In the event of a power failure or if the units gets unplugged the trim settings will be lost.

Draft Trim: Circle one (See point 4a on page 37)

LED #1 LED #2 LED #3 LED #4 LED #5

Feed Trim: Circle one (See point 4b on page 37)

LED #1 LED #2 LED #3 LED #4 LED #5

FUEL: Circle One

PELLETS – CORN – WHEAT - RYE - CHERRY PITS - DISTILLER'S GRAIN

PROGRAM: Circle one (see Figure 26 on page 39)

1 2 3 4

Serial Number:

Date of Purchase:

Dealer Information:

Even Temp, Inc.
P.O. Box 127
Waco, NE 68460

EMAIL: support@stcroixstoves.com

WEB ADDRESS: www.stcroixstoves.com