Prescott Series
Operation & Maintenance Manual

Table of Contents

ST. CROIX FEATURES 2
INSTALLATION 3
PREVENTING CHIMNEY FIRES 3
SATISFACTORY PERFORMANCE 3
APPROVED FUELS 3
- **Pellets, Cherry Pits & Pellet /Corn mix** 3

OPERATING INSTRUCTIONS 4
- **Control Board Features** 4
- **Thermostat Function – How does it work?** 5
- **Pre-Lighting Instructions** 6
- **Lighting Your Stove** 6
- **Shutting the Stove off** 6
- **Diagnostic Features** 6
- **Safety Features** 7
- **Combustion Air Damper** 8
- **Flame Pattern Characteristics** 8

MAINTAINING THE STOVE 9
- **Daily Maintenance** 10-11
- **Periodic Maintenance** 11-12
- **Yearly Maintenance** 13-14

SAFE OPERATION 15
TROUBLESHOOTING AND FAQ 16-20
PARTS LAYOUT 21-22
WARRANTY 23

"Please read this entire manual before installation and use of this pellet fuel-burning room heater. Failure to follow these instructions could result in property damage, bodily injury or even death."

"Contact local building or fire officials about restrictions and installation inspection requirements in your area.

Save these Instructions

Dear St. Croix Wood Pellet Stove Owner:

Congratulations! Your purchase of a St. Croix wood pellet stove places you among a select group of individuals who have demonstrated their concern about residential heating efficiency and our environment.

This owner's manual is designed to help you obtain maximum benefit from your St. Croix wood pellet stove.

Please read this manual in its entirety BEFORE operating your pellet stove. During the manufacturing process every effort has been expended to ensure that each St. Croix wood pellet stove meets the highest quality standards of material and workmanship.

Here are some important aspects of wood pellet stove installation and operation which you must observe in order to obtain maximum comfort and safety from your new St. Croix wood pellet stove.

1. Have your new St. Croix wood pellet stove installed by trained, qualified personnel.

2. Use only clean, dry quality wood pellets that are known to burn satisfactorily in your stove.

3. Faithfully adhere to the maintenance program described in this manual. Thank you for selecting a St. Croix wood pellet stove as the environmentally preferred answer to your residential heating needs.

Prescott Series

SAVE THIS OPERATIONS AND MAINTENANCE MANUAL

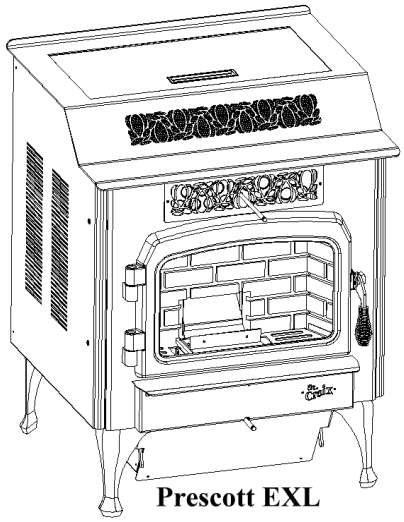

Prescott EXL **Large 80 Lbs. Hopper**

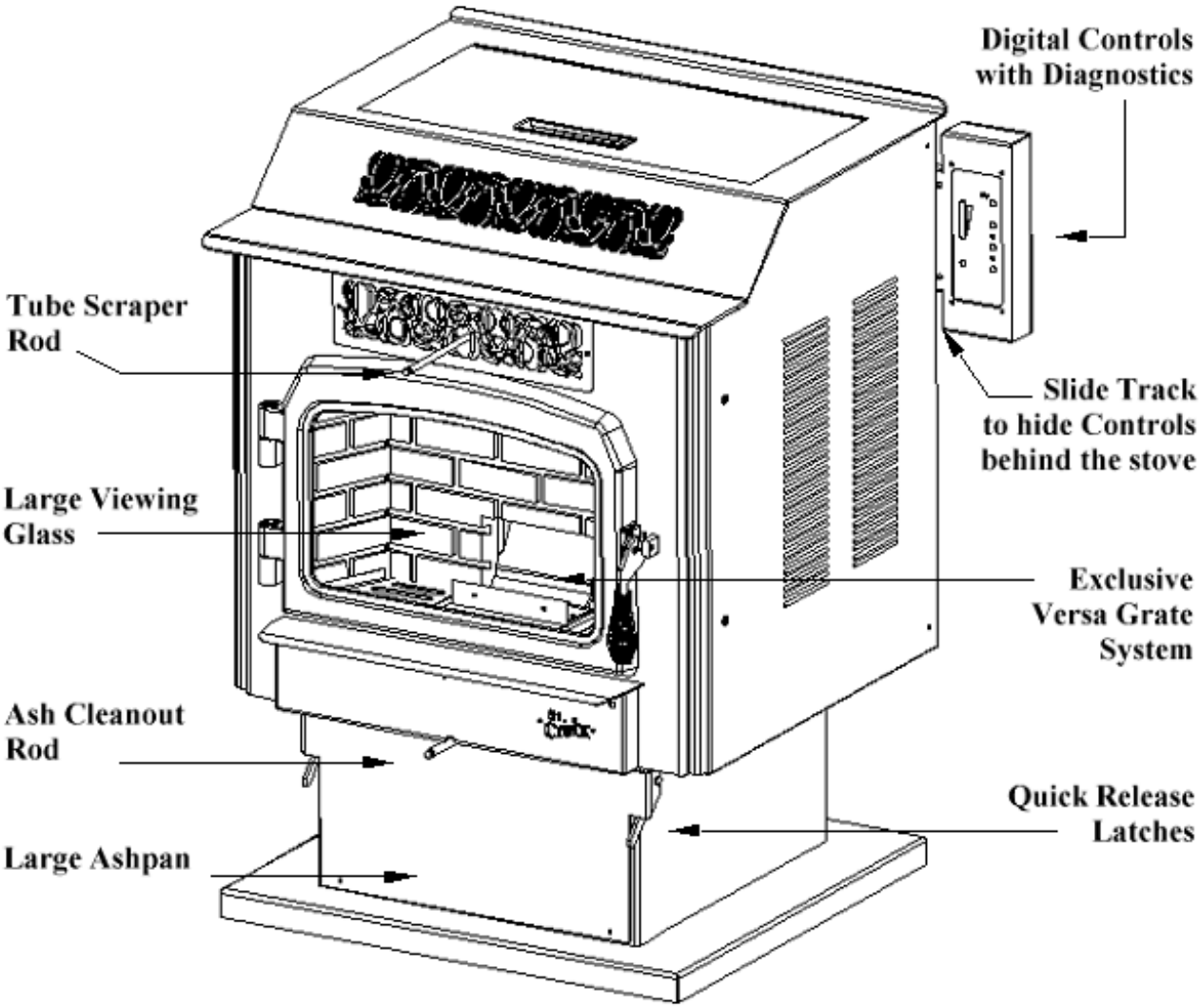

Prescott EXP

Figure 1

Operation and Maintenance
Prescott Series Wood Pellet Stove

CAUTION: Operate this unit only with the fuel hopper lid closed. Failure to do so may result in emission of products of combustion from the hopper under certain conditions. Maintain hopper seal in good condition.

INSTALLATION

Proper installation is essential for safety, effective operation, warranty coverage, insurance requirements and to meet local building codes. Installation requirements are described in the Installation Manual included with your new stove.

PREVENTING CHIMNEY FIRES

Chimney fires can be prevented by properly operating the stove and by periodic inspection and cleaning of the chimney. When wood is burned it produces tar and other organic vapors, which combine with expelled moisture to form creosote. The creosote vapors condense in the relatively cool chimney flue associated with a slow burning fire. As a result, creosote residue accumulates on the flue lining. When ignited this creosote can result in an extremely hot chimney fire.

The chimney and chimney connector should be inspected at least once every two months during the heating season to determine if a creosote build-up has occurred. If a significant layer of creosote has accumulated (3 mm or more) it should be removed to reduce the risk of a chimney fire. Use of an appropriately sized chimney brush or the services of a professional chimney sweep are recommended.

SATISFACTORY PERFORMANCE

The keys to satisfactory performance are: proper operation of the stove, diligent maintenance and burning only dry, clean, quality fuel. Clinkers and ash are a by-product of combustion and are not caused solely by your stove. Stove performance can be quickly and severely reduced if poor quality pellets are used.

APPROVED FUELS

PELLETS

NOTE: ***Contact your dealer for more information on APFI approved wood pellet fuels.*** Pellets with excessive sawdust should be screened by sifting with 1/4" mesh screening. Store Pellets under cover on a wooden pallet or other methods to ensure they do not become rain soaked or absorb moisture from damp or wet floors. Do not store pellets within stove installation clearances or within the space required for ash removal. ***The stove is not warranted against damage caused by poor pellets, incorrect operation, poor maintenance or incorrect installation***.

CHERRY PITS

Cherry Pits will burn much in the same manner as pellets. They will have higher ash content than Premium Pellets. Adjust your maintenance schedule accordingly. ***No standards exist for cherry pits as a fuel. Inspect fuel before purchasing. The stove is not warranted against damage caused by poor cherry pits, incorrect operation, poor maintenance or incorrect installation***.

ADD CORN TO THE MIX

The Prescott is approved to burn a mixture of pellets and corn (maximum 50% corn). The Thermostat Switch should be set to the Manual position. (*See Fig. 2 on page 5*) Operation of the stove doesn't change when burning a mixture of pellets and corn. The burn pot will need to be cleaned on a daily basis, using the "Pot Scraper Tool" shown in figure 5 on page 9. Use the Pot Scraper Tool to remove any clinkers that build up because of the corn when needed. For more information, read the Daily, Periodic and Yearly Maintenance section towards the back of this manual.

OPERATING INSTRUCTIONS

A different type of heater. The pellet stove is neither a cord wood stove nor a furnace. Its operation and maintenance differ from the traditional wood stove. FOLLOW THESE OPERATING INSTRUCTIONS EXACTLY AS STATED TO ENSURE SAFE AND RELIABLE OPERATION.

1. Carefully read this "Operation and Maintenance" manual in its entirety BEFORE lighting your stove for the first time.

2. Obtain final inspection and approval of installation from local building officials.

3. Carefully clean all marks off the gold plated parts before the first fire is lighted. Use a soft cloth and a "Windex" type cleaner. **Caution:** Never use an abrasive cleaner on any plated or painted parts of the stove.

4. Have your dealer demonstrate all the operational and maintenance steps necessary for proper use of the stove. Sign and return the warranty card, to the address listed on the back page.

5. Some odors may be given off during the first few hours of burning during initial break-in. These odors are normal and not harmful. However, ventilating the room until the odors disappear is recommended.

6. The stove will become HOT while in operation. Keep children, clothing and furniture away from all stove surfaces. ***WARNING:*** **Direct contact with the stove while operating may cause skin burns.**

7. To avoid the possibility of smoke and/or sparks entering the room always keep firebox and de-ashing doors closed whenever the stove is operating.

8. A certain amount of carbon monoxide may be produced within the stove as a by-product of combustion. All exhaust vent connections must be sealed with RTV silicone to assure a gas tight seal. Any leaks into a confined area caused by faulty installation or improper operation of the stove could produce dizziness, nausea and in extreme cases, death.

9. An outside source of combustion air is required on all mobile home installations. If room air is used to supply combustion air, room air starvation, operation of exhaust fans and icing of air vents can adversely affect proper stove operation. If these conditions exist, outside air should be used.

10. Smoke detectors, installed in the same general area as the stove, may be activated if the stove door is left open and smoke is allowed to enter the area.

CONTROL BOARD FEATURES

READ "FREQUENTLY ASKED QUESTIONS" ON PAGES 15-19 BEFORE OPERATING THE STOVE.

The Control Board controls all functions of the Stove by monitoring sensors that are in the system. These sensors serve 2 purposes.

a. General Operation of the Stove.

b. Safety Features, to shut the unit down in the event the sensors detect a problem in the unit.

The Control Board also has Diagnostic Capabilities to help in diagnosing 3 areas in the Stove. These areas are:

1. High Temperature Limit.
2. Proof of Fire Sensor
3. Vacuum in the Firebox

A closer look at the Control Board on page 5, in figure 2 will explain how the board works. There are five buttons labeled 1 through 5, a slide switch labeled 6 and a LED Light bar with 5 Heat Settings. ***The LED Light bar is also used during the Diagnostic process, see page 6 and 7 for more details.***

The buttons on the board function as follows: *(Refer to Figure 2. The touch pad buttons and Slide Switch are labeled with the white numbers 1 through 6)*

1. The Heat Level button (1) will advance the setting between level 1 and 5. Once you reach level 5, it will drop back to level 1. Each level has a LED light to indicate where the board is set.

2. The On/Off button (2) turns the Stove On and Off. It will also reset the board after the board has sensed a problem and is flashing a Diagnostic code.

3. The auger button (3) will allow the customer to manually auger pellets into the burn pot on start up when needed. This is particularly helpful in priming the Auger Tube when it is empty.

4. The Draft Trim button (4) allows for adjusting the Exhaust fan voltage on Heat Level 1 only. Push the button and the all of the LED Lights in the light bar will flash once. This decreases the Exhaust fan voltage approximately 5 volts below the default setting. Push the button a second time and all of the LED Lights in the light bar will flash twice. This decreases the voltage approximately another 5 volts. Pushing the button a 3rd time will reset the voltage to the default setting. **This adjustment is available to fine tune the #1 Heat Level draft setting only.** This would only be used in the case the Stove was hooked up to a tall Vertical Chimney *(see point 9 on page 18 for more information)*

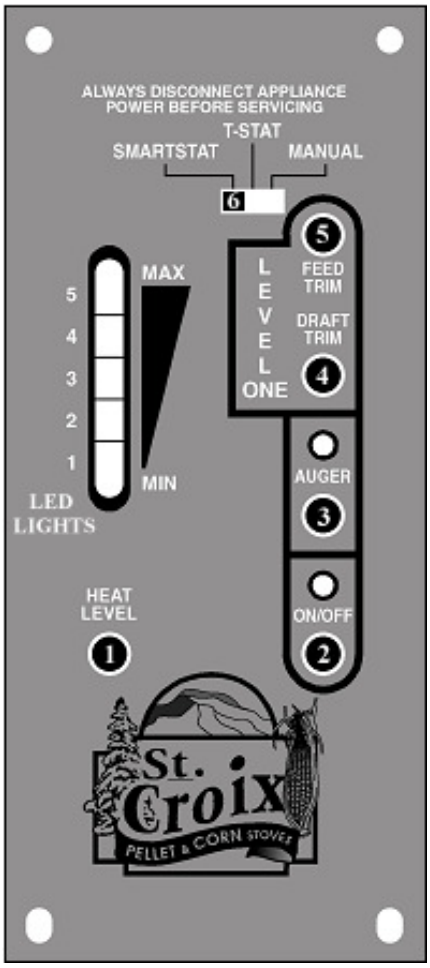

Figure 2

5. The Feed Trim button (5) will allow the Fuel feed rate to be adjusted **on Heat Level 1 only.** Heat Level 1 should be seen as the Pilot setting of the Stove, when operating on a Thermostat. Pushing the Feed Trim button (5) will switch between the different adjustments. Heat Level one can be adjusted in the following ways:

a. The first LED only indicates the Normal #1 setting. (1.5 second on time). This is the default setting.

b. The first and fourth LED lights indicate the #1 **Low** setting. (1.25 second on time) This will reduce the heat output on the #1 setting. This setting will also create more buildup on the glass. (See point 8 on page 17)

c. The first and fifth LED lights indicate the #1 **High** setting. (1.75 second on time) This will produce the most heat available on the #1 setting. This is helpful in keeping the glass a little cleaner when burning on low.

The adjustments described in points 4 and 5 remain in effect as long as the unit is plugged in. If the unit gets unplugged or if there is a power failure the settings are lost and the adjustments would need to be reset.

Thermostat Function – How does it work?

6. Thermostat Slide Switch. Use this switch to change the Operations mode between a Manual Mode, T-stat Mode or a fully Automatic ***"SmartStat"*** Mode.

Manual Mode – The stove is controlled by the control Board and the operator; no thermostat involved.

T-Stat Mode – This is where a thermostat controls the stove, but the stove never shuts down. In this mode the stove will advance to the Heat Level that has been selected when the thermostat calls for heat and drops to the #1 Heat Level and pilots when the thermostat doesn't call for heat.

SmartStat Mode – How does it work?

The SmartStat Function on a St. Croix Pellet stove is the way a St. Croix operates as a Fully Automatic stove. A stove operating as a Fully Automatic stove works great when constant heat isn't needed. The stove lights when heat is needed and shuts off when

it isn't needed. However this is not the way to operate a stove once the Heating Season arrives. Then a constant source of heat is what you will be looking for. This is where the ***"SmartStat"*** puts the St. Croix in a different category. The stove operates on a Thermostat and once the heat demand has been met the stove will drop into the #1 Heat Level and pilots there for one hour. If the thermostat doesn't call for heat during that one-hour period, the stove will shut down and wait to re-light itself when the thermostat calls for heat again. The control board automatically switches back and forth between a "Piloting Thermostat System" and a "Fully Automatic Thermostat System" based on how often the thermostat calls for heat. This eliminates the On/Off cycle of an Automatic stove, once the Heating season arrives.

Pre-Lighting Instructions

When lighting your stove for the first time, or any time you have run out of Pellets, you will need to fill the hopper. Pellets are fed from the hopper to the burn pot by an auger. A high torque motor that is capable of doing SERIOUS harm to fingers drives the auger. Keep fingers and other objects away from the auger.

WARNING: The Auger can start at any time while the stove is running

CAUTION: The Ash Cleanout Rod must be pushed in to operate the stove. (See Figure 1 on page 2)

WARNING: The Fire Door and Ash Pan Door must be in the latched position during normal operation.

Lighting Your Stove. (Refer to Figure 2)

1. Make sure there are pellets in the hopper and the viewing door and ash pan door are closed.

2. Push the On/Off button on the control board. (*Button #2)*

At this point all that needs to be done is to monitor the burn pot to make sure the stove starts up properly. Once the On/Off button has been pushed the Start Up program takes over.

The Start up Program works as follows:

a. The Combustion fan and Room fan come on at high speed and the control board checks to make sure the Vacuum switch locks in. (See Diagnostic features in column to the right.)

b. When the board senses the Vacuum switch the Combustion fan drops to the #1 setting and the Room fan shuts off.

c. The Igniter and the Auger come on (the Auger only runs for 2 minutes). The stove will typically light in the first 3 - 4 minutes. After 5 minutes the board checks for "Proof of Fire" and starts feeding pellets on the #1 setting (See Diagnostic Features in the column to the right). Once the board senses P.O.F. the Igniter shuts off and the stove has started successfully.

d. If the board fails to sense P.O.F. it will repeat the previous step and continue feeding pellets on the #1 setting for 5 more minutes.

e. The board will check for P.O.F. one more time. If the board still fails to sense the Proof of Fire switch, the stove will go into "Safety shutdown" (See Diagnostic Features in the column below).

If this happens, repeat steps 1 through 4 from the section on Lighting Your Stove.

CAUTION: NEVER ADD FIRE STARTER TO A HOT STOVE.

Shutting The Stove Off *(Refer to Figure 2)*

1. Press the On/Off switch (2) once; the lights will go off and the fire will go out in a few minutes. The board essentially goes into "Safety shutdown".

2. As long as the Exhaust Temperature within the stove remains above 110°F, the Room Air Fan, the Combustion Exhaust Fan and the Versa Grate motor will continue to run. Once the P.O.F. switch drops out the Combustion Fan runs for another 10 minutes and finally the stove shuts down completely.

3. NEVER unplug the stove to shut it off. Doing so may cause a significant amount of smoke to enter the room.

Diagnostic Features of the Control Board

The #2 LED and the #3 LED lights on the LED Light bar as show in Figure 2 will flash to give a

diagnostic code to help in diagnosing problems that may occur.

These conditions fall into 2 categories:

a. Heat related issues.

b. Vacuum related issues.

The Diagnostic Lights flash as follows:

1. The **Proof of Fire** switch. This switch will sense the temperature of the Exhaust rising during start up. If the Exhaust temperature does not reach 110 degrees F, or if during use the temperature drops below 110 degrees F, the Stove will go into **"Internal Alarm"** and the Auger will quit feeding fuel. Once the stove completes the safety shutdown, the #3 LED will start blinking. *(See Figure 2 on Page 5 and point 3 on page 15)*

2. The **High Limit** switch. This sensor will sense if the unit reaches temperatures that are too high for normal operation. If this happens the Auger will quit feeding and the #2 and #3 LED lights will flash simultaneously. *(See Figure 2 on Page 5 and point 4 on page 16)*

3. The **Vacuum** Switch - For the stove to operate, the Firebox needs to be sealed. During the first 30 seconds after the stove has been turned on the Control Board will check if the switch senses negative pressure (Vacuum) in the Firebox of the stove. If there is no negative pressure, the stove will shut down and the #2 LED will start blinking. *(See Figure 2 on Page 5 and point 2 on page 15).*

"Power Reset". If the board becomes unresponsive you must unplug the stove, wait 10 seconds and plug the stove back in to reset the board.

"Internal Alarm". When the control board becomes unresponsive, the control board is in Internal Alarm. The control board has sensed one of the Safety sensors. This may cause the stove to go out. **In some cases, after waiting approximately 45 seconds the stove will start responding to the control board again.** Many times, the cause of this is a change in the vacuum inside the stove. This may be caused by excessive wind, opening the Firebox door or opening the Ash Pan door. The control board will monitor the vacuum switch and resume normal operation if the vacuum returns to normal.

Safety Features

1. **"High Limit" switch",** an overheat safety switch will shut off the fuel feed if the Stove reaches temperatures above normal operating temperature. This is a "Normally Closed" switch and is part of the Fan limit control. If the High limit switch trips several times, the problem in the Stove ***must*** be diagnosed before the Stove is put back in service, (Defective Room Fan, dirty Room Fan, defective Fan Limit Control or possibly a bad Control Board)

2. **Proof of Fire switch** also called the **P.O.F.** This senses the temperature rise in the exhaust system. The switch is "Normally Open" and closes the circuit at 110 degrees. The Stove will shut down if temperatures above 110 degrees F are not sensed during start up or if the temperature drops below 110 degrees during normal operation.

3. **Vacuum switch** also called the **Negative pressure switch**. When the stove is turned on the Exhaust fan will create a negative pressure in the firebox. The control board continually checks to see if Negative Pressure (vacuum) is present during operation of the Stove. If the exhaust venting system becomes clogged or obstructed, the firebox door or ash pan door are left open or the exhaust fan quits working the control board will go into "Safety shutdown". There is a 60 second window to allow for cleaning the glass and removing the clinker before then Stove shuts down. This is sufficient for the Daily Maintenance

4. **Hopper Lid Switch.** The hopper lid switch will shut off the auger motor when the hopper lid is open. Be sure the lid closes completely when refilling the hopper or the unit will shut down.

The St. Croix Pellet Stove has been Safety Tested by an accredited, independent laboratory.

WARNING: These safety features are designed to protect life and property. Bypassing these features voids all warranties and the safety listing of the stove.

Combustion Air Damper

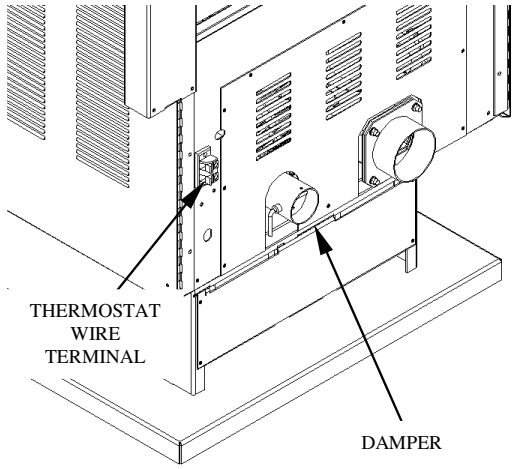

Figure 3

Damper Adjustment

When burning pellets make sure to check for the formation of creosote in the unit and venting system. Constantly running the stove on a low setting with too much combustion air may cause creosote to form. Burn pot temperatures can be "too cool" when burning on low with too much draft.

Adjusting the Damper may take a little time and patience, but only needs to be done once. After the damper has been adjusted to the venting system in your home, the control board will do the rest.

The purpose of this damper is to adjust combustion airflow to match the characteristic of each specific air inlet and chimney configuration. There is a setscrew in the damper *(shown in Figure 4)* and the damper has been preset at the factory. This setting will most likely work for 90% of the most common installations. Long horizontal runs might need the damper opened. Tall vertical runs might need the damper to be closed a little, etc. To adjust the damper, use the setscrew to make the adjustments. To make an adjustment turn the screw ½ turn clockwise to open the damper or ½ turn counter clockwise to close the damper. Remember to use the damper handle to bring the damper up to the screw. The damper will not close by itself. After making an adjustment wait at least 15 minutes to see how the burn pot reacts to the change. **Adjusting the damper during the break in period is very important (See "Preventing Chimney Fires" on page 2)**. Break-in requires the burning of 15 bags of pellets or continuous burn for two weeks. If during the initial break-in period you experience difficulty keeping the stove burning or there appears to be an excessive amount of burning pellets being evacuated from the burn grate, it may be necessary to close the damper some more. Once the damper is fine tuned for settings 1, 2, 3 and 4 the stove will run fine without having to make a change to the damper setting unless the stove is run on 5 for extended periods of time. It is normal for ash and some sparks to be continually evacuated from the burn grate. This is how the grate continuously cleans itself. The equivalent of a teacup of unburned pellets a day in the ash pan is considered normal.

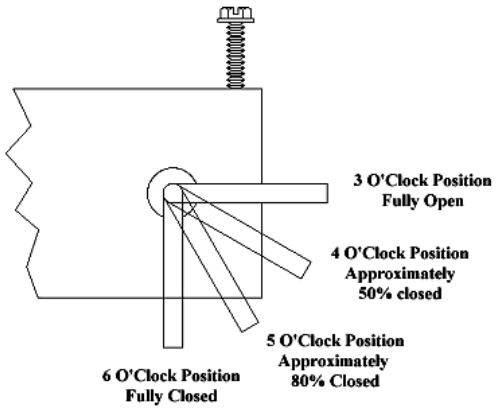

Figure 4

Flame Pattern Characteristics

Correct Flame Pattern - Bright yellowish-white flame with a brisk movement, having sharp pointed end tips extending up towards the Heat Exchange Tubes while forming a fan-like shape. Small amounts of ash and some live sparks being blown out from the Burn Pot area is considered normal operation.

Incorrect Flame Pattern - Dark orangish-brown flame with a lazy movement, having black smoky end tips curling up and over the Heat Exchange Tubes while forming a fireball-like shape. Some Ash or Live Sparks not being blown out from the Burn Pot area is considered abnormal operation. Extremely black soot forming on the ceramic glass surface is a sign of very poor combustion (not enough combustion air) and should not be overlooked. At the other end of the spectrum; an

extremely brisk flame which blows large pieces of live coal out from the Burn Pot area and causes stubborn shiny black build-up on the glass (too much combustion air) is also considered undesirable. **If you experience problems adjusting the stove during the Break-In Period, contact your dealer.**

MAINTAINING THE STOVE - The stove requires a minimum amount of daily maintenance. Required maintenance depends largely upon the quality of pellet fuel burned and the rate of burn. The amount of daily maintenance will increase if fuel quality decreases and/or the burning rate of pellets increases.

NOTE: FAILURE TO KEEP YOUR STOVE CLEAN, AS DESCRIBED IN THIS MANUAL, COULD RESULT IN POOR OPERATION, INEFFICIENT FUEL USAGE AND A POSSIBLE SAFETY HAZARD! IT IS YOUR RESPONSIBILITY TO DETERMINE NEEDED MAINTE-NANCE FREQUENCY.

The Versa Grate System (see Figure 5 below). The benefit of this feature is that the stove can operate for longer periods of time, with most fuels, without the grate requiring cleaning. If the flame becomes dark orange, is accompanied by black smoke or burns with a lazy motion - it's time to clean the grate **When you first operate your stove or whenever you change fuels check to determine needed cleaning frequency.**

First, let's become familiar with the burn system in a St. Croix Pellet stove. Remember, cleaning frequency may change dramatically from one fuel to another. Pellets with high ash content or that have increased amounts of impurities or high moisture content. Every St. Croix Pellet stove model will have the same system as shown in figure 5 below. There is a 2-piece burnpot. The top Part is called the **"Grate Weldment"**. This sits on top of the **"Shaker Plate"**. This in turn sits on top of the **"Shaft/Cage Weldment"** and is held in place with the **"Spacer"** & **"Self Locking Twist pin"**. The Shaft/Cage weldment is moved towards the front of the stove and then towards the back of the stove by the **"Cam"** that is connected to the **"Versa Grate Motor"**. This motion is constant, while the stove is in operation. The only parts that may need to be removed for cleaning purposes during the Daily or Periodic Maintenance are the "Grate weldment" and the "Shaker Plate". This is to check the holes in the burnpot system to see if they are plugged.

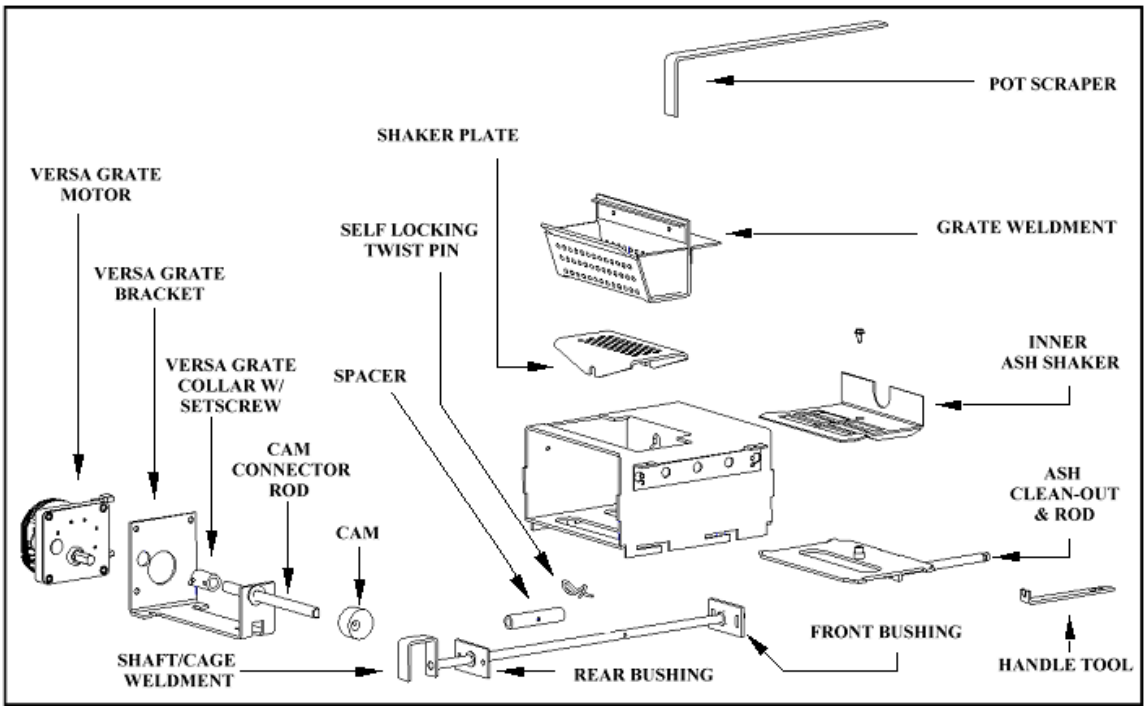

Figure 5

Daily Maintenance

1. Check Grate Weldment and Shaker Plate (See figure 5) to determine if holes are plugged. Clean as needed. With proper precautions the grate may be partially cleaned while the stove is hot. Follow these steps:

CAUTION: THE DOOR AND FRONT PART OF THE STOVE WILL BE HOT. DO NOT TOUCH ANY PART OF THE STOVE THAT IS HOT!

a. Wear a leather glove that covers the lower arm.

b. Turn the Stove to Heat Level 1 and allow the flame to burn down to a low burn.

c. Open the firebox door slowly to prevent drawing ash or odors into the room.

d. Use the "scraper" provided to move the burning pellets to one side of the grate, leaving the ash in the bottom of the grate. (See Fig 5 & 6)

e. Rake the ash & clinkers out over the grate into the ash pan.

f. Rake the burning pellets across the bottom of the grate.

g. Close the door.

h. Re-select the desired heat setting.

CAUTION: NEVER ADD FIRE STARTER TO A HOT STOVE.

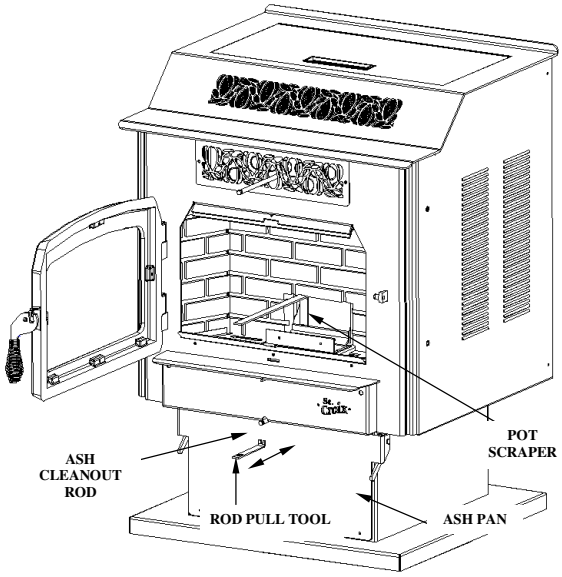

Figure 6

2. Remove ash buildup under the grate bottom daily or as frequently as needed. Clean the ashes out from under the burn pot by pulling the Ash Cleanout Rod in and out several times (see Fig. 6) Use the Rod Pull Tool with the Ash Cleanout Rod. This tool is hanging on a screw on the back of the stove; this provides a convenient location to keep the tool in reach and prevent it from getting lost.

CAUTION: The Ash Cleanout Rod must be pushed all the way in during operation of the unit. Failure to keep this area clean could result in a safety hazard.

3. Check ash pan (See Fig. 6) to determine emptying frequency needed. NOTE: Do not use a vacuum cleaner for this purpose. Hot coals may cause your vacuum filter to catch fire. Place ashes in a metal container with a tight fitting lid. The closed container of ashes should be placed on a noncombustible floor or on the ground, well away from all combustible materials, pending final disposal. If the ashes are disposed of by burial in soil or otherwise locally dispersed, they should be retained in the closed container for at least two days until all cinders have thoroughly cooled.

4. Once or twice daily pull the Heat Exchange Tube Scraper, *(See stove layout on page 2)* out and back to clean heat exchange tubes. Failure to operate the tube scraper daily may result in poor combustion and loss of heat output. This should be done when the stove is cool or operating on the low temperature setting. Use the Rod Pull Tool shown in Figure 6 with the Tube Scraper Rod.

5. The rate of burn and the quality of fuel will determine how often the window needs cleaning. Prolonged burning at a slow burn rate will result in the need for more frequent window cleaning. Burning poor fuel also increases the need to clean the window. Cooling the stove and wiping the window daily with a cloth or paper towel will normally keep the window from accumulating difficult to clean residue. Use of a glass cleaner ONLY permitted when the stove is cold. *Tip: Dip the damp towel in the ashes to remove stubborn buildup on the glass.*

CAUTION: Do not slam the door. Do not operate the stove with a broken or cracked glass. Replace only with heat resistant ceramic glass supplied by the manufacturer.

6. Burn the stove at the HI fuel setting for at least 20 to 30 minutes each day. This helps keep the window, ceraboard and firebox area clean. A daily high burn also aids in maintaining the overall efficiency and performance of the stove.

Periodic Maintenance

CAUTION: Periodic maintenance should only be done while the stove is shut off and cold.

1. Empty the ash pan when it appears full. This may range from 1 to 2 weeks in the Prescott EXP model. The Prescott EXL model has a much smaller ashpan and should be checked at least twice a week. The frequency of cleaning the ash pan will depend on the quality and amount of pellets being used. Carefully check to make sure the ash pan door is tightly closed after each opening.

2. The Prescott models have 3 Exhaust Cleanout/Ash Trap covers, 2 of which are located below the rear brick panel and a 3rd Clean Out is located behind the Ash Pan. Remove covers and clean regularly. (*See stoves shown in Figure 7)* Be sure to clean both sides.

   Use scraper shown in figure 5 & 6 to scrape ash into ash pan. Use a vacuum (cold stove only) to thoroughly clean these areas.

IT IS CRITICAL THAT YOU KEEP ASH CLEAN OUTS CLEAN FOR SATISFACTORY PERFORMANCE.

Frequency of cleaning Ash Traps depends on the amount of fuel being burnt and the quality of the pellets. Fuel with low ash content is recommended.

Failure to clean the ash traps can cause the stove to become plugged with fly ash and could result in a Safety Hazard.

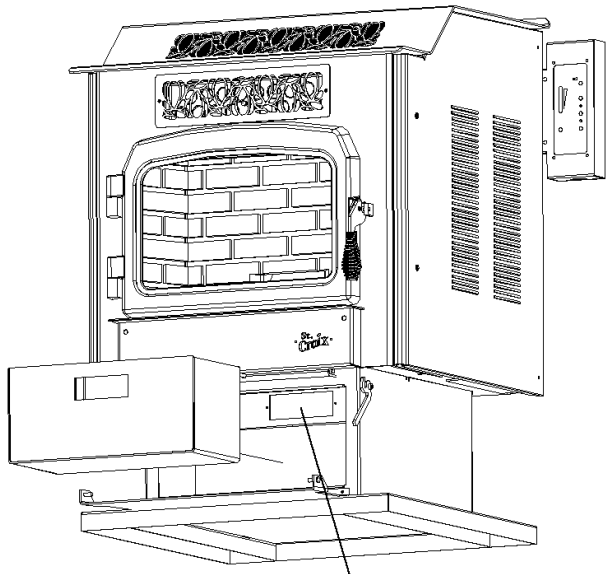

THE LOCATION OF THE THIRD CLEAN-OUT/ASH TRAP BEHIND THE ASH PAN IN A PRESCOTT EXP

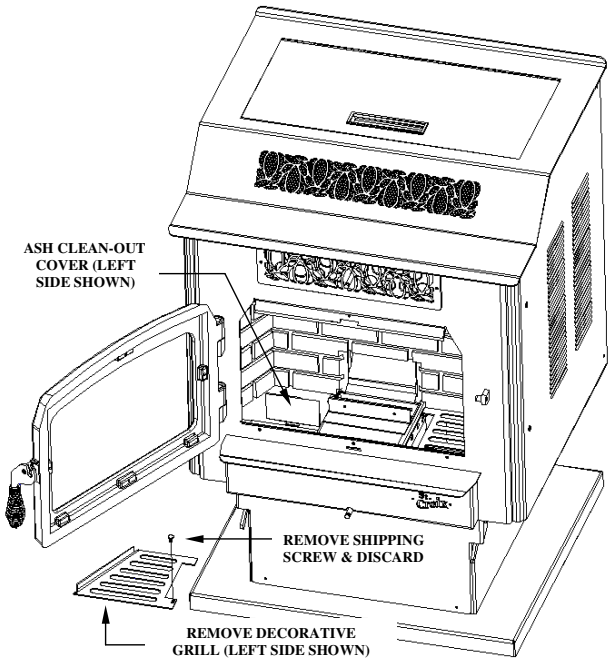

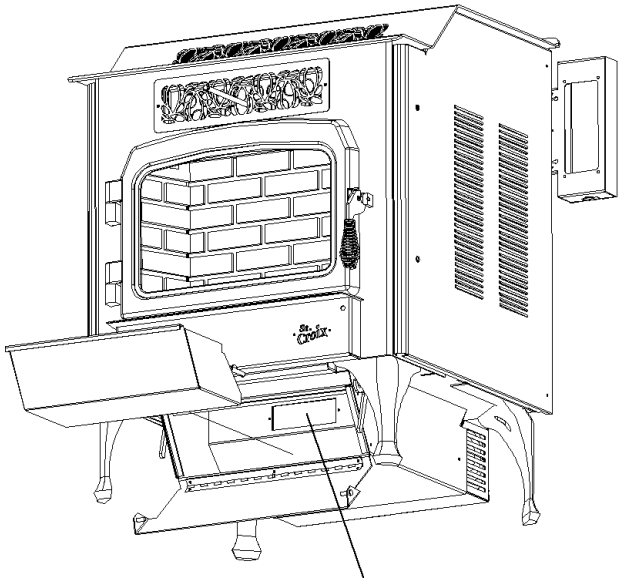

THE LOCATION OF THE THIRD CLEAN-OUT/ASH TRAP BEHIND THE ASH PAN IN A PRESCOTT EXL

Figure 7

3. Clean burn grate holes at least weekly. Remove the burn grate and use a small metal object to clean out plugged holes. (*See fig. 5 on page 9.*)

4. Remove the baffle and clean the ashes that accumulate on a regular basis.

Frequency of cleaning depends on amount of fuel being burnt and the quality of the pellets. Fuel with low ash content is recommended.

Failure to clean the baffle can cause the stove to become plugged with fly ash and could result in a Safety Hazard.

To remove the baffle *(See Figure 8)*, lift the back of the baffle up to clear the inner back of the stove and slide towards the front of the stove. The baffle will slide out of the keyhole slots and drop down. ***When putting the baffle back in the stove, make sure the screws are in the keyhole slots and the back of the baffle is lifted up over the inner back.***

5. Periodic cleaning of the exhaust system is required. Under certain conditions creosote buildup may occur rapidly. Low quality pellets and poor installations require more frequent chimney cleanings. **See Page 3 "Preventing Chimney Fires".** The products of combustion will also contain small particles of fly ash. The fly ash will collect in the exhaust vent and restrict the flow of the flue gases. Judge the frequency of cleaning by checking the amount of ash that accumulates in the elbows or tee's of the exhaust system. Ask the dealer for suggested frequency of cleaning, equipment needed and procedures for cleaning. Check the exhaust system at least once every two months during the heating season.

Periodically inspect the condition of the rope gasket around the door, window and ash door. Replace as needed.

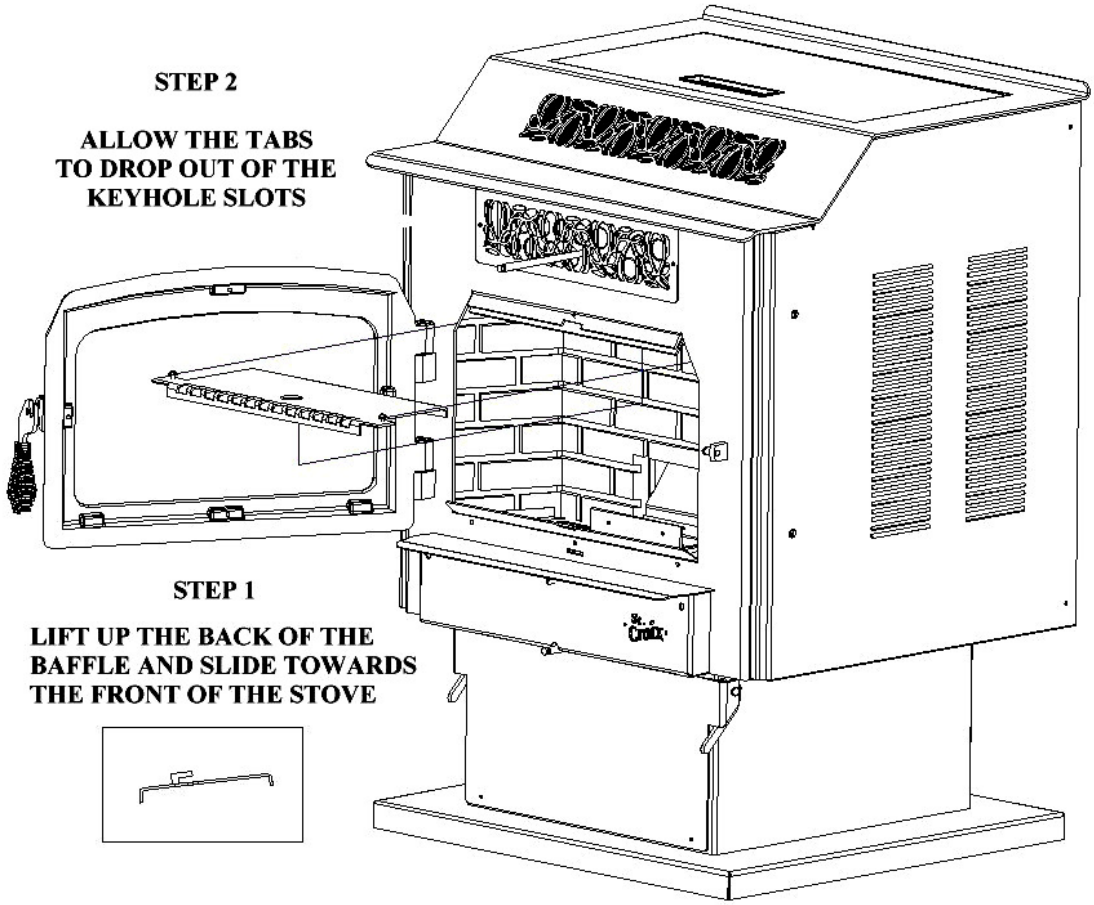

Figure 8

Yearly Maintenance

Yearly maintenance is designed to assure safe operation, prolong the life of the stove and help preserve its aesthetic appeal.

1. **Spring Shutdown**. After the last burn in the spring, cool the stove. Remove all pellets from the hopper and the auger. Thoroughly clean the burn grate, burn grate box, ash pan and ash traps behind the ash pan. *(To locate the ash traps see Figure 7 on page 11)*

NOTE: UNPLUG THE STOVE. Open the side panels of the stove. Carefully clean or vacuum any sawdust, cobwebs and household dust.

Carefully vacuum around the fan motors. If electrical wires become disconnected call your dealer for service.

2. The exhaust system should be thoroughly cleaned at least annually. Call your dealer for this service.

3. The motor/fan area behind the firebox and under the hopper should be vacuumed annually.

4. The Exhaust and Room fans should be removed and cleaned annually. Call dealer for this service. Annual oiling of the motors is not needed. (See fig. 8)

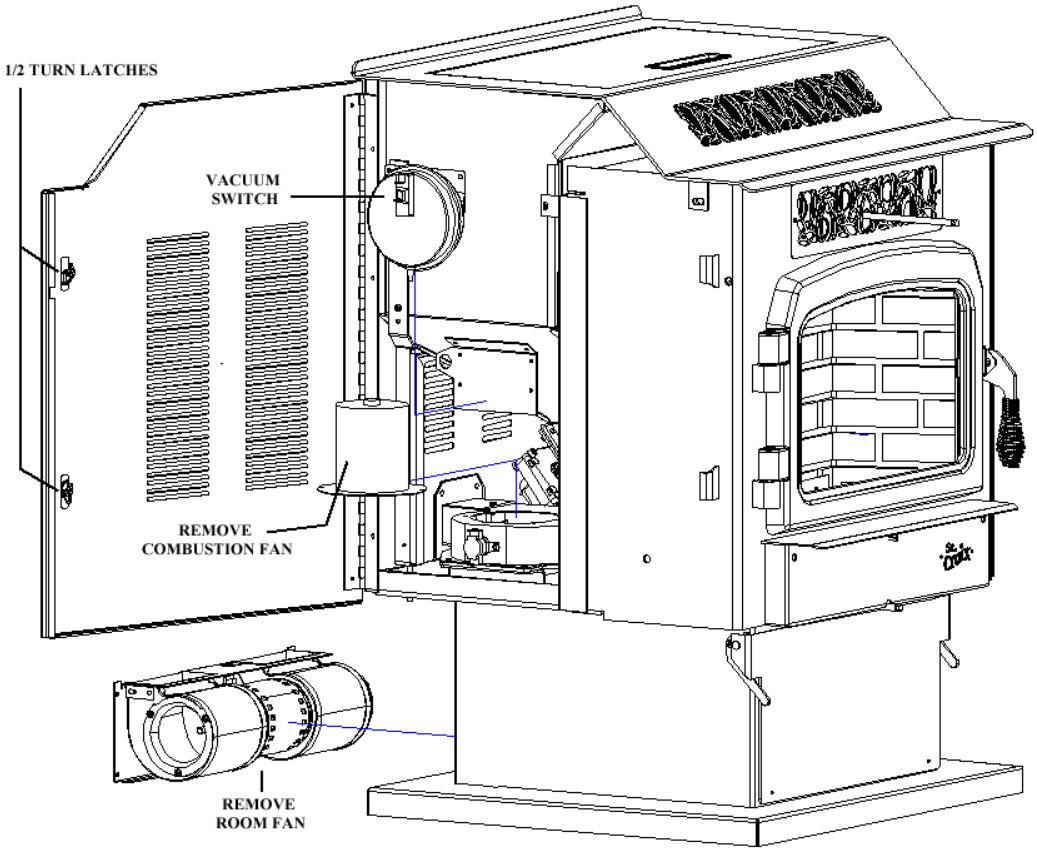

Figure 9

Note: The Vacuum Switch may be removed to allow easier access to the combustion fan

5. The Versa Grate System needs to be lubricated once a year with some High Temp Anti Seize to prevent the parts from "squealing" add some Anti-Seize to the Cam and Rod at both bushings. To gain access to the Versa Grate System in the Prescott Series open the right side panel when facing the stove. To locate the Rear Bushing assembly, follow the rod from the Shaft/Cage Weldment towards the front of the stove. The front bushing is located below the igniter in the front of the stove. Remove the ash lip cover as shown in figure 10.

   Many dealers offer a Service Contract that will cover needed periodic and yearly maintenance. Contact your St. Croix dealer for assistance in maintaining your stove in top condition.

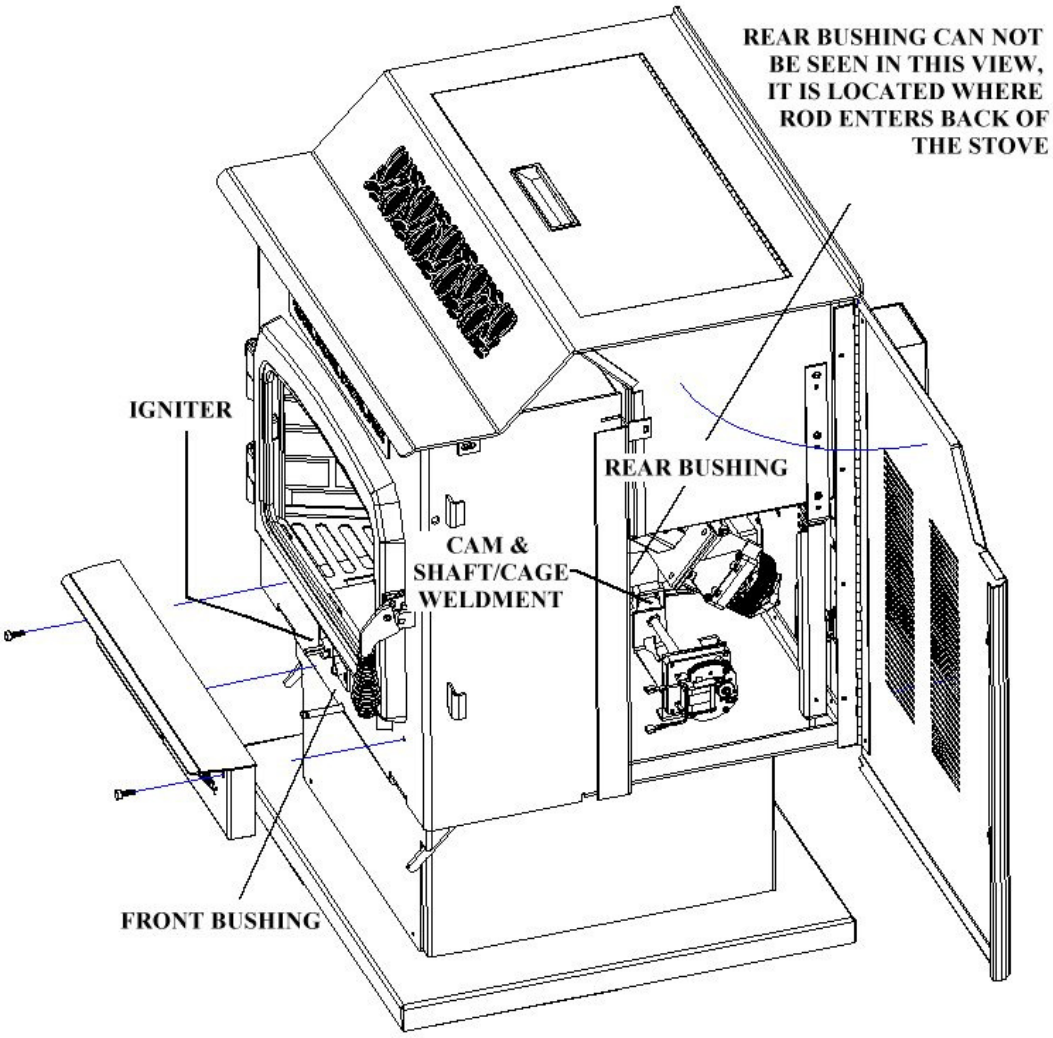

Figure 10

Fall Startup. Prior to lighting the first fire, check the outside area around the exhaust and air intake systems for obstructions. Try all controls to see that they are working prior to lighting a fire.

SAFE OPERATION.

1. **Disposal of Ashes.** Ashes should be placed in a metal container with a tight fitting lid. The closed container of ashes should be placed on a non-combustible floor or on the ground, well away from all combustible materials, pending final disposal. If the ashes are disposed of burial in soil or otherwise locally dispersed, they should be retained in the container until all cinders have thoroughly cooled.

2. **Never use Gasoline,** gasoline type lantern fluid. Kerosene, charcoal lighter fluid or similar liquids to start or "freshen up" a fire in this heater. Keep all such liquids well away from the heater while it is in use.

3. **Creosote, Soot and Fly Ash:** Formation and Need for Removal. The products of combustion will contain small particles of Fly Ash. The fly ash will collect in the venting system and restrict the flow of flue gases. Incomplete combustion, such as occurs during start-up and shut-down, or incorrect operation of the room heater will lead to some soot or creosote formation which will collect in the venting system. The exhaust system should be inspected regurlarly during the heating season to determine if creosote buildup has occurred. Check more frequently at first to determine a schedule for cleaning the venting system based on individual use of this Pellet-burning heater. If creosote has accumulated, it should be removed to reduce the risk of a chimney fire.

4. **Do not Overfire this unit.** Follow all instructions regarding the proper use of this heater.

CAUTION: The Electrical Components of the stove are not Owner Serviceable. Call your dealer for proper diagnosis of electrical problems and service to those components. See Installations Manual for a copy of the Wiring Schematic.

TROUBLESHOOTING & FRQUENTLY ASKED QUESTIONS

The stove is very trouble free in operation when properly maintained and quality pellets are used. When the stove fails to operate properly, troubleshooting by the operator of the stove is limited. Please read the following guide for answers to frequently asked questions

1. When first starting the stove remember the auger tube is empty, which will delay feeding fuel to the burn pot. This will in some cases prevent the stove from starting.

   Solution: Prime the burn pot if the auger tube is empty.

2. **My stove isn't burning and the number 2 Feed Light is blinking.** This diagnostic light indicates the vacuum switch no longer senses negative pressure in the firebox area of the stove. What caused the stove to go out?

   a. The door of the unit was left open longer than 60 seconds. **(See solution)**
   b. The ash pan door was left open for longer than 60 seconds. **(See solution)**
   c. The combustion fan is not running. (Defective fan or control board)
   d. The vacuum switch is defective.
   e. The vacuum hose is disconnected
   a. The vent system is plugged with fly ash.

   Solution: If the fire is out, re-light the stove. If the fire is still burning make sure all doors are securely latched and hold down the On/Off button (approximately 5 seconds) until stove starts up again. This will restart the stove in the start-up program. Occasionally use the auger button to manually feed fuel until the auto-feed takes over **(Auto feed will start 5 minutes after the stove has been restarted).**

3. **My stove isn't burning and the number 3 Feed Light is blinking.** This diagnostic light indicates that the Proof of Fire Switch no longer senses a fire in the stove. First check to see if there are pellets in the hopper. If there are pellets in the hopper, why did the stove go out?

   a. Unburned fuel in the Burn Pot means the fire went out before the Auger quit feeding.

   Solution: There is too much combustion air, adjust the air damper or the Draft Trim on Level 1. Pellets would still feed until the P.O.F. switch eventually shuts the stove down (See *Damper Adjustment* in the Operations Manual and point 8 on page 18).

   b. If the Burn Pot is empty means the Auger quit feeding fuel while there was still a fire in the burnpot. Check to see if there is fuel in the hopper. If the hopper is empty, fill the hopper and re-light the stove.

   c. If there is fuel in the hopper, check to see if there is an obstruction in the auger system or if the auger set screw is loose.

   Solution: Remove obstruction and re-light the stove or tighten the setscrew on the auger shaft.

4. **My stove isn't burning and the #2 and #3 Feed Lights are blinking simultaneously.** These 2 LED lights diagnose the High Limit Switch and will indicate the stove reached an Over Temp situation.

    a. Check to see if the High Limit switch needs to be reset. If the High limit switch needs to be reset, do not use the stove until you find out why the High Limit tripped.

    b. The room air fan could be defective or the fan may need cleaning.

    c. The high limit switch also may be defective. It is best to call your dealer for support when trying to troubleshoot the High Limit Switch. Do not use your stove if the High Limit switch frequently trips.

5. **I lit the stove and the # 2 Feed Light immediately started blinking and smoke spills out of the stove.** How do I get the stove to quit smoking?

    Cause: The stove did not establish a vacuum and shut down. With the fuel in the pot burning, the smoke finds the path of least resistance and leaks out into the house. (See Installations Manual. Minimum vertical height needed to establish some natural draft and prevent smoke spillage)

    Solution: Pull the Slide-Out Bottom out and drop the fuel into the ash pan. This will minimize the amount of smoke that can spill into the room.

6. **I turned the stove on with the On/Off switch and nothing happens.** First check to see if the stove is plugged in and the receptacle has power to it.

    Solution: Check the fuse on the back of the control board. Replace with a 250 Volt, 5 Amp fuse. Part Number 80P20057-R

7. **Why is my glass dirty?** Normal operation of your St. Croix stove will produce a white/tan build-up on the glass that wipes off with a dry paper towel. However, extended burning on the low setting only, will produce a darker tan color. These types of build-up on the glass are normal. A heavy black build-up on the glass could indicate a problem.

    Solution: Adjust the combustion air setting to the proper setting. If this doesn't seem to help, make sure the clean out cover plates are installed in the stove. It also could be an indication that the stove is getting plugged and needs a good cleaning. Refer to the section in the manual that covers the Daily, Periodic and Yearly Maintenance of the stove.

8. **How do I adjust my low burn (#1 setting)?** Not all pellets burn at the same rate. The quality of the pellets and the BTU content greatly influences the burn. Following is a description of the function of the auger trim button. The type of fuel used will determine the solution needed. Higher BTU fuel may require a reduction of the federate. Lower BTU fuel may require an increase in the federate.

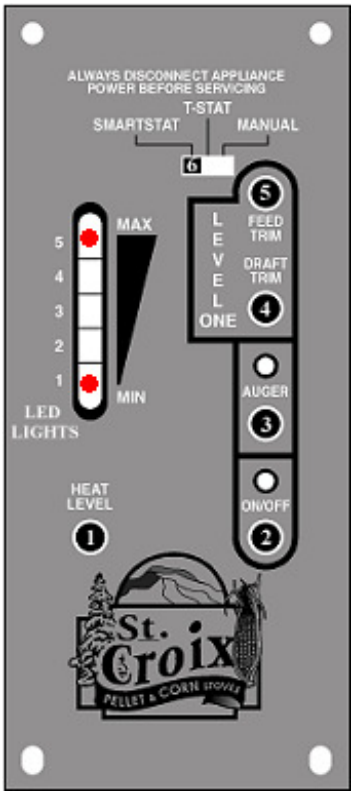

Solution: The auger trim button on the control board allows the feed rate on #1 to be increased or decreased depending on the type of fuel used.

a. Pressing the auger trim button once will turn the #1 and #5 light on at the same time. This is an increase of .25 seconds to the On-Time of the #1 setting.

This is the **#1-High setting, 1.75 seconds**

Using the auger trim button is also helpful when trying to keep the glass cleaner when burning on the #1 setting. The more fuel on low will usually mean less build up on the glass.

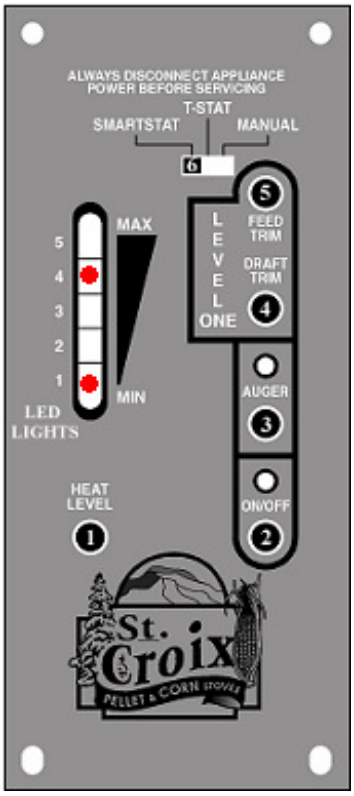

b. Pressing the auger trim button again will turn on the #1 and #4 light at the same time. This will decrease the feed rate by .25 seconds.

This is the **#1-Low setting, 1.25 seconds.**

The #1 Low setting will give less heat, but will also cause more build-up to form on the glass.

9. **Why is my glass dirty and how to use the Draft Trim button to help correct it?** Normal operation of your St. Croix stove will produce a build-up on the glass that should be wiped off on a daily basis. However certain types of pellets or extended burning on the low setting will cause the glass to smoke up faster.

A heavy black build-up on the glass could indicate a problem. You will find two types of heavy build-up that should be looked into further.

a. A heavy black sooty build-up that wipes off easily with a dry paper towel.

Solution: This type of build up usually means not enough combustion air. First look at the condition of the burnpot to determine that it doesn't need cleaning. If the pot is plugged the burning pellets will be lacking in combustion air and produce black soot. Clean the pot and only adjust the damper after observing the burn. If you see black tips of smoke on the flame open the damper in small increments (Read "Damper Adjustment" on page 8). After adjusting the damper wait 15 minutes for the pot to balance out before making another adjustment.

b. A heavy shiny "glazed" build up on the glass usually means too much air when the stove is burning on the lower levels (levels 1 & 2). When burning the stove like this the pellets "flame-out" every so often, when the auger feeds more pellets they tend to smolder too much causing this stubborn build-up on the glass.

Solution: First trim the combustion fan voltage for level 1 by pressing the Draft Trim button once (see button in figure to the right indicated with the arrow). You will see all five lights on the light bar flash once. This will reduce the combustion fan voltage by approximately 5 volts. Stoves hooked to tall vertical chimneys may need another adjustment by pressing the Draft Trim button again. All five lights on the light bar will flash twice. This will reduce the voltage again. Pressing the fan button again or if the stove is unplugged will reset the voltage to the default setting. This will help compensate for the natural draft in the chimney. Secondly read the section in the Operations Manual on adjusting the damper. close the damper until the flame gets lazy with black tips on the flame. Now open the damper in small increments of 1/16th of an inch or less. Wait 15 minutes after each adjustment to observe the burn. Once the flame becomes brisk without black tips you have the correct amount of air. Do not open the damper too far (Read "Preventing Chimney Fires on page 3 of this manual)

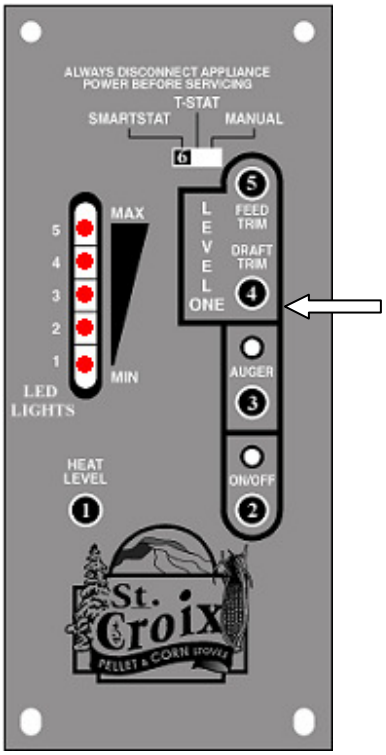

Remember: Any of the above mentioned adjustments to the #1 setting using the Draft Trim or the Feed Trim on the control board will be lost if the unit gets unplugged or if there is a Power Failure.

10. **The ON/OFF light blinks under certain conditions. Does this mean anything?**

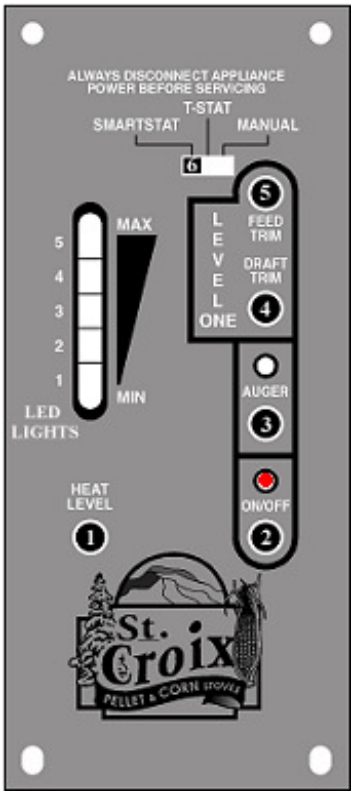

a. The ON/OFF light blinking will mean one of two things. When the stove is first started and the stove is in the "Start-up" program, the light blinks until the "Proof of Fire" switch locks in. This indicates the "Normal Operation" and the light stays on constantly.

b. If the stove is running on a Thermostat, it will start up as described in point (a), but during "Normal Operation" when the Thermostat is not calling for heat the stove drops to the #1 setting and "Pilots" until the thermostat calls for heat again. The LED light indicating the Heat Level will not drop to the #1 setting during "Pilot Mode". During this time the ON/OFF light will be blinking and the auger light blinks when pellets are feeding into the burnpot, indicating that the stove is in "Pilot Mode". If the stove is running in "SmartStat" Mode, the stove will shut down completely 1 hour after the Thermostat called for heat the last time. Once the stove has completely shut down, all lights on the board are off with the exception of the On/Off light. It will be blinking.

11. **The ON/OFF light is always blinking and the stove only runs on with a low fire, even though I have the Heat Level on #5.**

If the stove *is* operating on a Thermostat, this usually indicates a problem in the Thermostat circuit. There is either a bad connection in the wires or the Thermostat itself has a problem. Troubleshoot all of the components in the system.

If the stove *is not* operating on a Thermostat, make sure the slide switch on the control board is in the "Manual" position.

12. **I am running my stove on the SmartStat with a Thermostat and I can't shut the stove down.** This may also be an indication of a problem in the thermostat circuit or of running the stove incorrectly. If the slide switch with #6 (See figure 2 on page 5) is set to "SmartStat" and the thermostat circuit is calling for heat, the stove cannot be shut off at the control board. You must first shut the thermostat off and then shut the stove off at the control board. If this isn't possible it may indicate a problem in the thermostat wires from the stove to the Thermostat or a defective Thermostat.

These questions and answers will usually solve most problems that you run into during the break-in period of the stove or if a component fails in the stove. Before calling your dealer for assistance, please read your **Operations Manual** and perform all the maintenance issues covered in the **Daily and Periodic Maintenance** section of the Manual. If the stove still does not operate correctly call your Dealer for Assistance.

Prescott Series Parts Layout

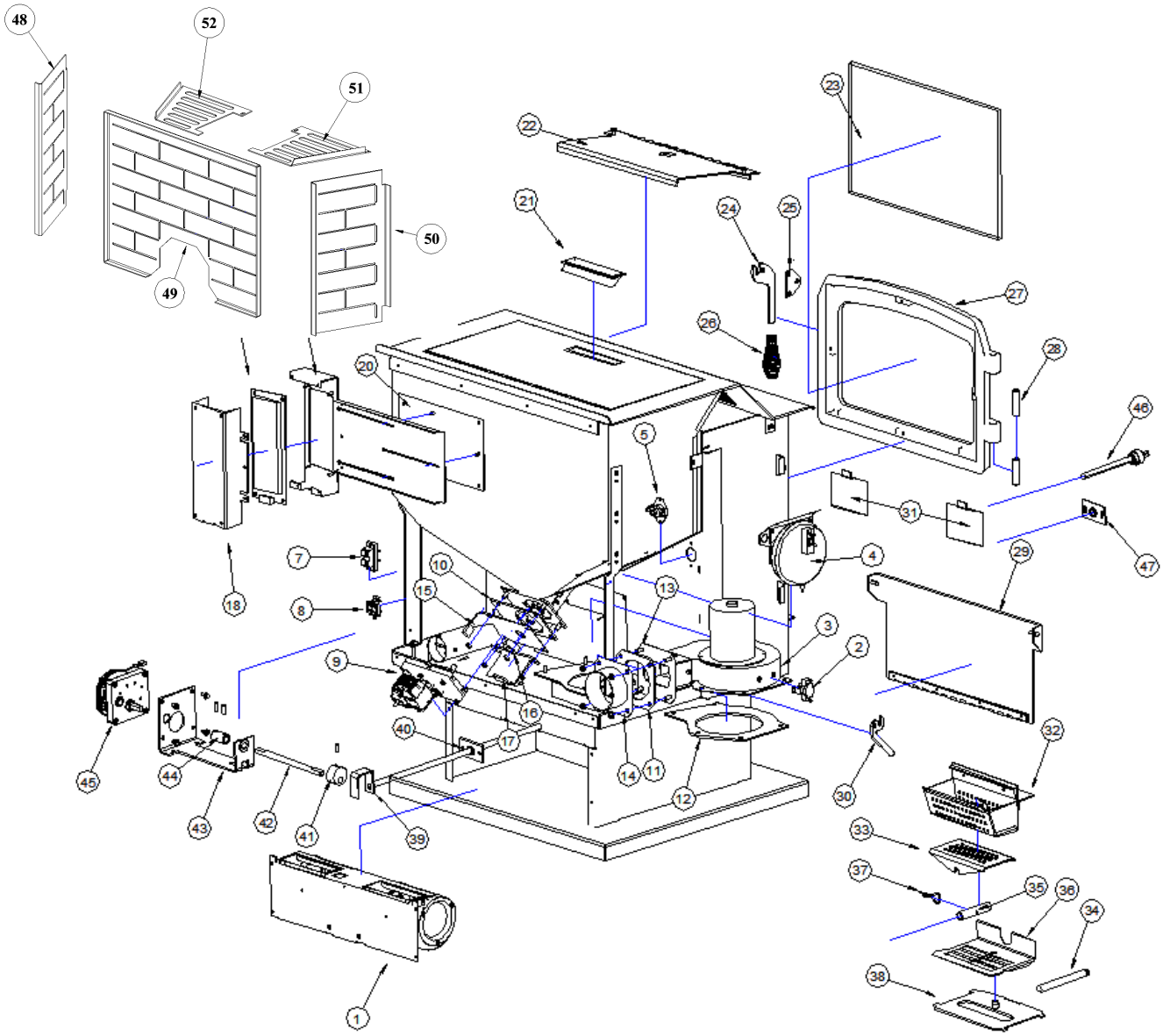

#	PART NUMBER	DESCRIPTION
1	80P20003-R	CONVECTION FAN
2	80P20038-R	PROOF OF FIRE SWITCH
3	80P20001-R	COMBUSTION FAN
4	80P52628-R	VACUUM SWITCH
5	80P52629-R	MANUAL RESET HIGH LIMIT
6	80P22348-R	CONTROL BOARD
7	80P30045-R	T-STAT WIRE TERMINAL
8	80P52630-R	WIRING TERMINAL BLOCK
9	80P20278-R	AUGER MOTOR
10	80P20245-R	AUGER GASKET
11	80P52232-R	QUICK DISCONNECT GASKET
12	80P20168-R	COMBUSTION FAN GASKET
13	80P53650-R	EXHAUST ADAPTER WELDMENT
14	80P52887-R	PIPE CONNECTOR ASSEMBLY
15	80P52957-R	AUGER MOUNT BRACKET ASSEMBLY

#	PART NUMBER	DESCRIPTION
16	80P20248-R	5/8” COLLAR WITH SETSCREW
17	80P30191-R	AUGER MOTOR RETAINER BRACKET
18	80P52658-R	CONTROL BOARD COVER
19	80P53785-R	CONTROL BOARD MOUNT BOX
20	80P53681-R	SLIDE TOP STANDOFF PLATE
21	80P20183-R	PLASTIC HOPPER HANDLE
22	80P52944-R	HEAT EXCHANGE BAFFLE
23	80P20033-R	GLASS FOR CAST DOOR
24	80P53707-R	DOOR HANDLE
25	80P53694-R	HANDLE MOUNT PLATE ASSEMBLY
25	**80P20036-BN**	**NICKEL COIL FOR DOOR HANDLE**
26	**80P20036-R**	**GOLD COIL FOR DOOR HANDLE**
26	**80P20091-R**	**BLACK DOOR FRAME**
26	**80P20032-R**	**GOLD DOOR FRAME**
27	**80P20106-R**	**NICKEL DOOR FRAME**
28	80P65021-R	½” DOWEL HINGE PIN
29	80P52668-R	ASH PAN DOOR ASSEMBLY
30	80P52645-R	ASH DOOR HANDLE
31	80P52237-R	ASH CLEAN OUT COVERS
32	80P52980-R	GRATE WELDMENT
33	80P52038-R	SHAKER PLATE
34	80P52592-R	POT SLIDER CLEAN OUT ROD
35	80P50553-R	SPACER
36	80P52765-R	INSIDE SLIDE
37	90596A029	SELF LOCKING TWIST PIN
38	80P53698-R	POT SLIDER ASSEMBLY
39	80P53695-R	SHAFT/CAGE WELDMENT
40	80P52955-R	REAR BUSHING ASSEMBLY
41	80P50560-R	CAM
42	80P52376-R	CAM CONNECTOR ROD
43	80P52953-R	VERSA GRATE BRACKET ASSEMBLY
44	80P52372-R	VERSA GRATE COLLAR W/ SETSCREWS
45	80P20296-R	VERSA GRATE MOTOR
46	80P52727-R	IGNITER (HOT ROD)
47	80P52954-R	FRONT BUSHING ASSEMBLY
48	80P30579-R	STEEL BRICK – RIGHT SIDE
49	80P30578-R	STEEL BRICK – BACK PANEL
50	80P30577-R	STEEL BRICK – LEFT SIDE
51	80P52775-R	DECORATIVE GRILL – LEFT SIDE
52	80P52774-R	DECORATIVE GRILL – RIGHT SIDE

PARTS NOT SHOWN

	80P20027-R	5/8” FLAT GLASS GASKET
	80P60083-R	GLASS RETAINER CLIP
	08P20026-R	5/8” DOOR ROPE GASKET
	80P20025-R	ASH PAN DOOR GASKET
	80P20004-R	POWER CORD
	80P21403-R	WIRING HARNESS
	80P52946-R	ASH PAN
	80P53666-R	AUGER SHAFT WELDMENT
	80P20057-R	125VOLT 5 AMP FUSE

ST. CROIX
PRESCOTT SERIES
WARRANTY

The wood pellet stove and insert manufactured by Even Temp, Inc. is warranted for five (5) years, to the original owner, against defects and workmanship on all steel parts (excluding the burn grate) and two (2) year on electrical components from the date of sale to the original owner. There specifically is no warranty on the paint, glass, burn grate, brick panels and all gaskets. There is no written or implied performance warranty on the stove, as the manufacturer has no control over the installation, daily operations, maintenance or the type of fuel burned.

This warranty will not apply if the stove has not been installed, operated and maintained in strict accordance with the manufacturer's instructions. Burning other than high quality wood pellets that meet A.P.F.I. specifications may cause stove damage and could void the warranty.

The warranty does not cover damage or breakage due to misuse, improper handling or modifications.

A warranty registration card is provided. The card is to be checked and signed and returned to factory, by the owner. Appropriate information is to be noted on the card.

All claims under this warranty must be made through the dealer where the stove was purchased. If an inspection by the dealer indicates that a warranty claim is justified, and that all conditions of this warranty have been met, the manufacturer's total responsibilities and liabilities shall be to repair or replace, at the manufacturer's option, the defective part(s). All costs of removal, shipment to and from the dealer or manufacturer, any losses during shipment and reinstallation and any other losses due to the stove being removed shall be covered by the owner of the stove.

NEITHER THE MANUFACTURER, NOR THE SUPPLIERS TO THE PURCHASER, ACCEPT RESPONSIBILITY, LEGAL OR OTHERWISE, FOR THE INCIDENTAL OR CONSEQUENTIAL DAMAGE TO PROPERTY OR PERSONS RESULTING FROM THE USE OF THIS PRODUCT. ANY WARRANTY IMPLIED BY LAW, INCLUDING BUT NOT LIMITED TO IMPLIED WARRANTIES OF MERCHANTABILITY OR FITNESS, SHALL BE LIMITED TO ONE (1) YEAR FROM THE DATE OF ORIGINAL PURCHASE. WHEN A CLAIM IS MADE AGAINST THE MANUFACTURER BASED ON THE BREACH OF THIS WARRANTY OR ANY OTHER TYPE OF WARRANTY EXPRESSED OR IMPLIED BY LAW, MANUFACTURER SHALL IN NO EVENT BE LIABLE FOR ANY SPECIAL, INDIRECT, CONSEQUENTIAL OR OTHER DAMAGES OF ANY NATURE WHATSOEVER IN EXCESS OF THE ORIGINAL PURCHASE PRICE OF THIS PRODUCT. ALL WARRANTIES BY MANUFACTURER ARE SET FORTH HEREIN AND NO CLAIM SHALL BE MADE AGAINST MANUFACTURER ON ANY ORAL WARRANTY OR REPRESENTATION.

Some states do not allow the exclusion or limitation of incidental or consequential damages, or limitations of implied warranties, therefore the limitations of exclusions set forth in this warranty may not apply to you. This warranty gives you specific legal rights, and you may have other rights, which vary from state to state.

Notes:

After the break in period, please note any adjustments that were made to the Feed Trim and Draft Trim on the control board in the area below. In the event of a power failure or if the units gets unplugged, the trim settings will be lost.

Draft Trim: Circle one (See point 4 on page 5)

Default Draft **Low Draft** **High Draft**

Feed Trim: Circle one (See point 5 on page 5)

Default #1 **#1-High** **#1-Low**

Serial Number:

Date of Purchase:

Dealer Information:

Even Temp, Inc.
P.O. Box 127
Waco, NE 68460

EMAIL: support@stcroixstoves.com

WEB ADDRESS: www.stcroixstoves.com